PHILIPS
RESPIRONICS

Trilogy Evo

Home Caregiver Manual

Trilogy Evo

Home Caregiver Manual

For Technical Support and Customer Service, contact Philips Respironics Customer Service:

1-724-387-4000
1-800-345-6443 (toll-free)

USA
Respironics Inc.
1001 Murry Ridge Lane Murrysville, PA 15668

Email: service@philips.com, clinical@philips.com
Web: www.philips.com\healthcare

Copyright © Koninkijke Philips N.V., 2019. All rights reserved.

This work is protected under Title 17 of the United States copyright code and is the sole property of Philips Respironics. No part of this document may be copied or otherwise reproduced, or stored in any electronic information retrieval system, except as specifically permitted under United States copyright law, without the prior written consent of Philips Respironics.

Trilogy Evo is the registered trademark of Respironics Inc.

The Bluetooth® word mark and logos are registered trademarks owned by Bluetooth SIG, Inc. and any use of such marks by Philips Respironics is under license.

Dawn Ultra is a registered trademark of Procter & Gamble.

Other trademarks and trade names are those of their respective owners.

Illustrations and screen images in this document are representative depictions.

Contents

1. Introduction

1.1 Overview 4
1.2 Device Usage 4
1.3 Package Contents 5
1.4 Warnings 5
1.5 Symbols Glossary 10
1.6 How to Contact Philips Respironics 12

2. About Trilogy Evo

2.1 Overview 13
2.2 Parts of Trilogy Evo 13
2.3 Parts of the User Interface 16
2.4 Monitoring Window 18

3. Device Setup

3.1 Overview 20
3.2 Placement 20
3.3 Connecting AC Power 20
3.4 Installing Filters 21
3.5 Connecting a Circuit 21
3.6 Connecting External Patient Monitors 25
3.7 Adding Oxygen 25
3.8 Starting Trilogy Evo 26

4. Device Operation

4.1 Overview 27
4.2 Starting and Stopping Therapy 27
4.3 Actions During Ventilation 27

5. Alarms and System Messages

5.1 Overview 29
5.2 About Alarms 29
5.3 The Alarm List 31
5.4 Setting the Alarm Volume 31
5.5 Responding to an Alarm 32
5.6 Alarms and System Messages 32
5.7 Testing Alarms 52

6. Device Options

6.1 Overview 56
6.2 Device Options 56
6.3 Calibration 57
6.4 Data Transfer 60
6.5 Information 62
6.6 Alarm and Event Log 62

7. Cleaning and Disinfection

7.1 Overview 64
7.2 Exterior Cleaning and Disinfection 64
7.3 Cleaning the Detachable Battery 66
7.4 Rinsing the Air-Inlet Foam Filter 67

8. Service and Maintenance

8.1 Overview 68
8.2 Service 68
8.3 Disposal 68
8.4 Daily Maintenance 68
8.5 Replacing the Air-Inlet Foam Filter 69
8.6 Replacing the Particulate Filter 69

9. Accessories

9.1 Overview 71
9.2 Portability and Travel Accessories 71
9.3 Power Accessories 71
9.4 Patient Circuits and Circuit Accessories 71
9.5 Monitors and Sensors 72
9.6 Filters 72
9.7 Oxygen 73
9.8 Communications Cables 73
9.9 Remote Alarm 73
9.10 USB Flash Drive 74

10. Power Management

10.1 Overview 75
10.2 AC Power 75
10.3 External Battery 75
10.4 Detachable Battery 76
10.5 Internal Battery 77
10.6 Battery Status 78
10.7 Power Loss 78
10.8 Power Icons 79

11. Connectivity
11.1 Overview 80
11.2 Wireless 80
11.3 Connectivity Actions 81
12. Technical Data
12.1 Overview 82
12.2 Specifications 82
12.3 Pneumatic Diagram 88
13. Regulatory Information
13.1 Standards Compliance 89
13.2 EMC Information 90
13.3 Wireless 95
13.4 Software Licensing 96
14. Glossary
14.1 Glossary of Terms 97
Warranty 102

1. Introduction

1.1 Overview

The Trilogy Evo ventilator provides invasive and non-invasive, positive pressure ventilation to adult, pediatric, and infant patients with a minimum weight of 2.5 kg. It is an electronically controlled, pneumatic ventilation system with an integrated air compressing system. It is compatible with a range of accessories to provide a variety of therapy modes.

The Trilogy Evo ventilator is a medical device intended for use by qualified, trained personnel under the direction of a physician according to its technical specifications. For training and support materials, see the Trilogy Evo website:
www.usa.philips.com/healthcare/product/HCDS2110X11B/trilogyevo

1.2 Device Usage

1.2.1 Intended Use

The Trilogy Evo ventilator provides continuous or intermittent positive pressure ventilation for the care of individuals who require mechanical ventilation. Trilogy Evo is intended for pediatric through adult patients weighing at least 2.5 kg. The ventilator can measure, display, record, and alarm SpO_2, FiO_2, CO_2, and Pulse Rate data when integrated with the appropriate accessories. The ventilator is suitable for use in institutional, home, and non-emergency transport settings for example wheelchair or personal vehicle. It may be used for both invasive and non-invasive ventilation.

1.2.2 Environments of Use

The Trilogy Evo ventilator is intended to be used:

- In both home and institutional environments.
- While attached to a wheelchair, bedrail, gurney, roll stand, or sitting on a flat surface such as a table or nightstand.
- While transporting patients within and between facilities and as needed for home use, such as an automobile or commercial aircraft.

1.2.3 Contraindications

If the patient has any of the following conditions, consult the patient's health care professional before using noninvasive ventilation:

- An inability to maintain a patent airway or adequately clear secretions
- At risk to aspirate gastric contents
- Acute sinusitis or otitis media
- Epistaxis, causing pulmonary aspiration of blood
- Hypotension

The AVAPS-AE therapy mode is contraindicated for invasive use and patients less than 10 kg.

1.2.4 Users

Users of the Trilogy Evo ventilator include: patients (adult), properly trained family and non-professional caregivers, clinicians (respiratory and non-respiratory), technicians, physicians, and service providers.

1.3 Package Contents

Package contents may vary based on model.

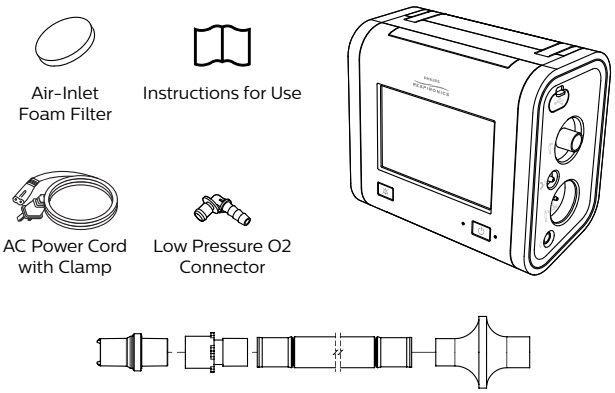

1.4 Warnings

Caution: U.S. federal law restricts this device to sale by or on the order of a physician.

1.4.1 Environmental

- You should not operate the device in the presence of flammable gasses.
- Do not cover the ventilator or place in a position that affects proper operation.
- Do not block the cooling and intake air vents.
- Do not operate the device in an environment that is outside the specified ranges. Using the ventilator outside of this temperature range or above this altitude can affect the device performance.
- Do not expose the device or detachable battery to temperatures above 60˚ C (140˚ F) during use or above 70˚C (158˚F) during storage. This will reduce battery life and may increase the risk of fire or damage the battery.
- The device is not intended for MRI or anesthesia applications, and is not intended to be permanently mounted in EMS vehicles.
- When disposing of this device or any accessories, ensure you comply with your local regulations. Dispose of any potentially biohazardous waste according to your local regulations.
- This device is intended for use in the electromagnetic environment specified in “EMC Information” on page 90. Ensure the environment is compatible. Portable and mobile RF communications equipment, including cables, should be no closer to any part of the device than the recommended separation distance indicated in “EMC Information” on page 90.
- This device is not made with natural rubber latex.
- Route all cables in a manner to prevent injury, such as tripping or strangulation, to the patient and caregiver.
- If the device has been stored at very high or very low temperatures, allow 2 hours for the device to reach ambient temperature before using. This allows adequate time for the battery to reach its operating temperature range for charging and discharging.
- This device is not defibrillation-proof.

1.4.2 Clinical

- Before placing a patient on the ventilator, perform a clinical assessment. Considerations should include:
  - Choosing alarm settings
  - Whether alternative ventilation equipment is required
  - Whether alternative monitors are required, such as SpO_2, PR, FiO_2, or $EtCO_2$ monitor with alarm
- Trilogy Evo is a restricted medical device. It is designed for use by respiratory therapists or other trained and qualified caregivers under the supervision of a physician. Only the supervising physician’s orders authorize changes to the prescription and other device settings. Before using Trilogy Evo, you must read and understand this manual.

- The caregiver or health care professional is responsible for verifying any changes to the device, prescription, or other settings before applying changes. The caregiver or health care professional is responsible for ensuring settings are correct and compatible with the patient. Using the wrong prescription for a patient may result in improper therapy, lack of appropriate safety monitoring, or risk of death or injury to the patient.

1.4.3 Alternate Ventilation

- To avoid patient death or serious injury, ventilator-dependent patients require immediate access to alternate ventilation equipment, such as a back-up ventilator or manual resuscitator.
- Qualified personnel should monitor ventilator-dependent patients continuously. Personnel should be prepared to provide alternate therapy in the event of ventilator failure or inoperative equipment.

1.4.4 Alarms

- Do not rely on any single alarm to detect a disconnected circuit.
- Respond immediately to any high priority alarm. It may indicate a potentially life-threatening condition.
- Visually monitor the patient and ventilator at all times during an alarm silence period. Allowing alarms to continue without intervention may result in harm to the patient.
- If the high-priority, Low Battery alarm occurs, immediately connect the ventilator to an alternate power source. If no alternate power source is available, immediately place the patient on an alternate source of ventilation.
- When using a remote alarm or nurse call system, fully test the system by verifying that you can hear the ventilator's audible alarms on the remote alarm or nurse call system.
- Test the operation of the circuit disconnect function daily and whenever the patient circuit is changed. An increase in circuit resistance can prevent proper operation of some alarms.
- When adding any components to the breathing system, the flow resistance and dead space of the added components such as humidifiers, speaking valves, Heat Moisture Exchangers (HMEs) and filters should be carefully considered in relation to the potential for adverse effects on the patient's ventilator management and device alarms.
- Do not set the Low Peak Inspiratory Pressure alarm too low, or the system may not detect large circuit leaks or a patient disconnect.

1.4.5 Accessories

- Use Trilogy Evo only with accessories intended for use with this device. For a list of accessories, such as patient interfaces, circuits, exhalation ports, and cables, see the Trilogy Evo accessories guide. Ensure accessories and parts are compatible before you connect a patient to the device. Consult the accessory's instructions before use. Electronic accessories that are not intended for use with this device may cause adverse performance including: increased electromagnetic emissions or decreased electromagnetic immunity of this equipment.
- The air-inlet foam filter is required to protect the ventilator from dirt and dust. See the "Service and Maintenance" chapter for maintenance instructions.
- Be certain that any bacterial filter used with this device complies with ISO 23328-1 and ISO 23328-2. To prevent patient or ventilator contamination, you must use a Philips Respironics-approved main flow bacterial filter on the patient gas outlet port. Filters not approved by Philips Respironics may degrade system performance. For a list of accessories, see the Trilogy Evo accessories guide.
- Nebulization or humidification can increase the resistance of bacterial filters. Monitor the breathing system frequently for increased resistance and blockage.
- Gas added by the use of a pneumatic nebulizer can adversely affect ventilator accuracy.
- When using a passive circuit an exhalation port is required.
- Do not use antistatic or conductive hoses or conductive patient tubing with the device.
- The ventilator system (used with patient circuit accessories, such as patient interface devices, humidifiers, water traps, and circuit tubing) may contain small parts that could result in a choking hazard.
- Be certain that any humidifier in use, including any heated breathing tube, complies with ISO 8185 or ISO 80601-2-74.
- Do not use mouthpiece ventilation for patients less than 5 years old due to physiological and neurological developmental requirements and due to neuromuscular coordination requirements for effective therapy.
- Be certain that any heat and moisture exchanger in use complies with ISO 9360-1 or ISO 9360-2.
- Only connect devices recommended by Philips Respironics to the USB ports. Connecting other devices could result in patient injury or damage to the ventilator.
- The Micro USB port is for service personnel only.

1.4.6 Oxygen

1.4.6.1 Low Flow Oxygen

- Do not use oxygen while smoking or in the presence of an open flame.
- Turn off the low flow oxygen when the device is not in use.

1.4.7 Cleaning and Maintenance

- To avoid electric shock, do not remove the enclosure cover. Only service personnel should remove the enclosure.
- Do not immerse the device or allow liquids into any of the controls or the interior of the enclosure as the device may be damaged. If this occurs, contact your equipment provider for assistance. Use only the agents and methods described in this manual to clean and disinfect the device. After cleaning and disinfecting, ensure the device is completely dry before reattaching accessories and connectors and before reconnecting it to a power source. Do not use solvents, polishes, or any oily substances on the device, as they are flammable.
- If the device has been exposed to rain or dampness, dry the device including the area around the power cord connection with the power cord disconnected from the device before applying AC power.
- Repairs and adjustments must be performed by service personnel only. Unauthorized repairs and adjustments could cause death or injury, invalidate the warranty, or result in costly device damage.
- If you notice any unexplained changes in the performance of the device, if it is making unusual sounds, if the device or detachable battery is dropped, if water is spilled into the enclosure, or if the enclosure is cracked or broken, discontinue use and contact Philips Respironics.
- To avoid electrical shock, always unplug the power cord from the wall outlet before cleaning the ventilator.
- Periodically inspect electrical cords, cables, and the detachable battery pack for damage or signs of wear. Discontinue use and replace if damaged.
- Any changes or modifications made to the device that are not expressly approved by Philips Respironics may void the user's authority to operate the equipment.

1.4.8 Power

- An external battery should only be connected to the ventilator using the Philips Respironics approved External Battery Cable. This cable is fused, pre-wired, and properly terminated to ensure safe connection.
- Use only the Philips Respironics Detachable Battery.

1.5 Symbols Glossary

See http://www.symbols.philips.com for a description of the symbols used on this device and its packaging.

Symbol	Definition	Symbol	Definition
Symbols on the Device Label and Package Label			
	Refer to instruction manual		Date of manufacture
	For airline use. Complies with RTCA DO-160F section 21, category M		Class II equipment
	Bluetooth® symbol		Type BF applied part
IP22	IP22: protection against finger-sized objects and protected against dripping water when tilted up to 15 degrees.	SN	Serial number
REF	Catalog number		Humidity limit
LOT	Batch code		Temperature limit
	Manufacturer	MR	MR unsafe
Symbols on the Device			
	On/Off (Standby) button	O_2 30 l/min MAX	Low flow oxygen inlet
	Alarm Silence button		Flow sensor cable connection
	USB port	P	Proximal pressure out
	Nurse call connection		AEV control line
–––	DC power (direct current)		Patient in

Symbol	Definition	Symbol	Definition
~	AC power (alternating current)		Patient out
O_2 41-87 psi (280-600 kPa) 1-150 l/min	Oxygen inlet		
Symbols on the Screen - General			
	Prescription settings	100% O_2	Deliver 100% oxygen
	Home window		Delete prescription
	Options		Touch screen lock
?	Help		Edit
AVAPS	Automatic algorithm restart		Device actions menu
Symbols on the Screen - Alarms			
	Alarms tab		Medium or low priority alarm
2:00	Alarm silence		System message
	High priority alarm	Reset	Alarm reset
Symbols on the Screen - Connectivity			
	Bluetooth data transfer		USB data transfer
Symbols on the Screen – Monitoring Views **See "Monitoring Window" on page 18**			
Symbols on the Screen - Power **See "Power Icons" on page 79**			

1.6 How to Contact Philips Respironics

If you need help setting up, using or maintaining Trilogy Evo, or if this device does not perform as expected, contact Philips Respironics.

Call Philips Respironics Customer Service at:

- 1-724-387-4000
- 1-800-345-6443 (toll-free)

Respironics, Inc.
1001 Murry Ridge Lane
Murrysville, PA 15668

2. About Trilogy Evo

2.1 Overview

This chapter describes the physical parts of the device and the parts of the user interface.

2.2 Parts of Trilogy Evo

2.2.1 Front Panel

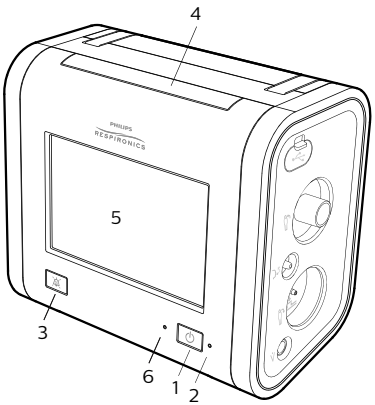

1. On/Off (Standby) button
2. AC power indicator
3. Alarm Silence button/alarm indicator
4. Alarm bar
5. Touch screen
6. Ambient light sensor

2.2.2 Back Panel

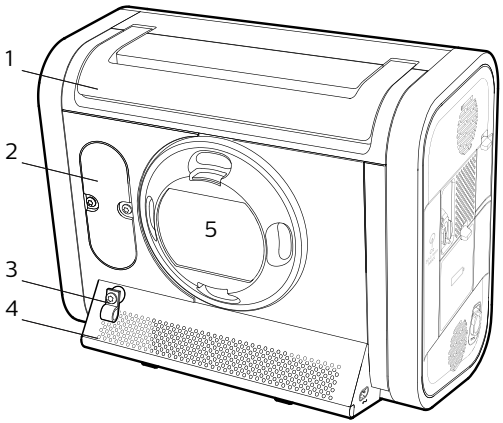

1. Carrying handle
2. FiO_2 sensor access panel
3. Power cord retention clip
4. Air vents
5. Air inlet

2.2.3 Patient Panel

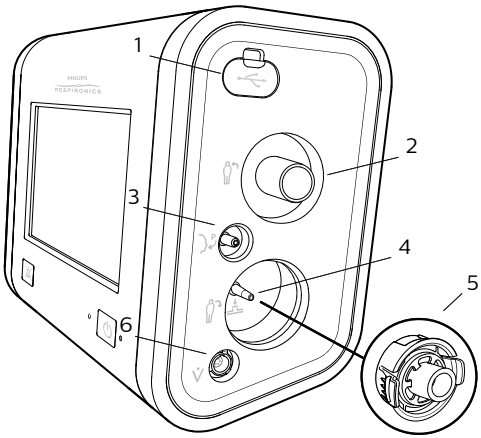

1. USB port
2. Inspiratory port (to patient)
3. Proximal pressure port
4. Active exhalation valve line connection for ActivePAP and Active Flow circuits
5. Dual limb active exhalation valve connection (from patient)
6. Flow sensor cable connector

2.2.4 Utility Panel

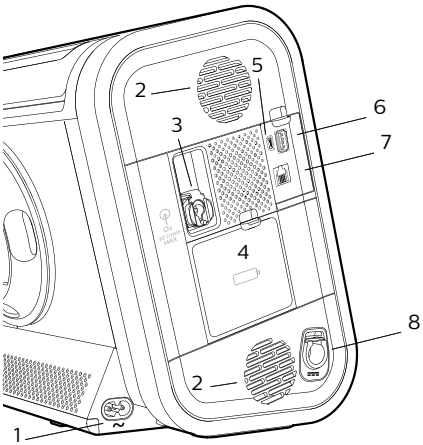

1. AC power connector
2. Air vents
3. Low flow oxygen inlet
4. Detachable battery access door
5. Micro USB port for device service only
6. USB port
7. Remote alarm or nurse call connector (RJ9)
8. DC power connector

2.3 Parts of the User Interface

2.3.1 Standard Screen Elements

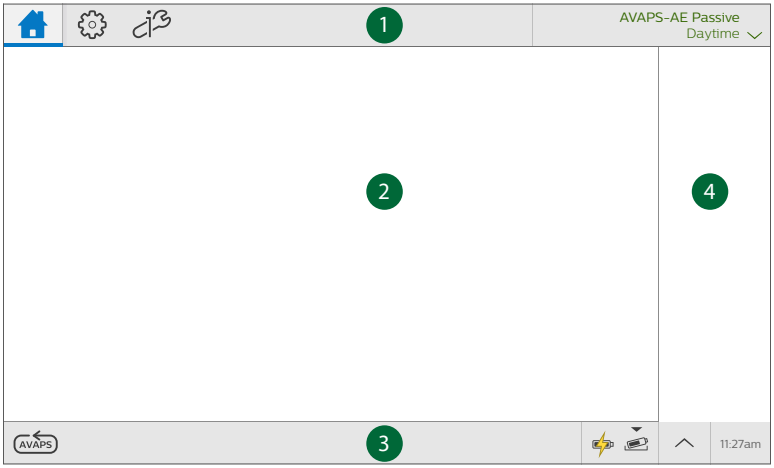

These standard parts appear on most screens.

1. Menu bar
2. Workspace
3. Status Bar
4. Monitored parameters pane

2.3.2 Menu Bar

Use the menu bar to navigate, manage alarms, set device options, and see the active prescription.

The menu bar has the following parts.

1. Tap the **Home** button to go to the home window.
2. Tap the **Prescription Settings** button to work with prescriptions.
3. Tap the **Options** button to work with device options.
4. When in the home window, tap the **Prescription List** to see a list of prescriptions.

2.3.3 Workspace

The workspace contents vary depending on the action you are performing, For example, the workspace can show the standby window, prescription window, or monitoring window.

2.3.4 Monitored Parameters Pane

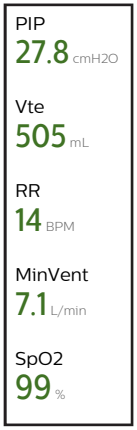

The monitored parameters pane shows values while delivering therapy. Depending on the accessory, values such as SpO_2 and pulse rate appear during ventilation and standby.

Parameters that may appear are:

— $EtCO_2$: end tidal carbon dioxide
— FiO_2: fraction of inspired oxygen
— MinVent: minute ventilation
— PIP: peak inspiratory pressure
— PR: pulse rate
— RR: respiratory rate
— SpO_2: saturation of peripheral oxygen
— Vte: exhaled tidal volume
— Vti: inhaled tidal volume

2.3.5 Status Bar

Use the status bar to monitor device status and the availability of manual therapeutic actions.

1	Automatic algorithm restart	5	Power sources and their status
2	Bluetooth	6	Device Actions menu
3	Bluetooth data transfer	7	System time
4	Alarm silence		

2.4 Monitoring Window

During ventilation, you can view different types of data. In the home window, the Views list shows the data types. Use the list to select the data you want to see.

2.4.1 Selecting a Monitoring View

To select a monitoring view, follow these steps.

1. In the **Menu Bar**, tap the **Home** button.
2. In the home window, tap the **Views** button.

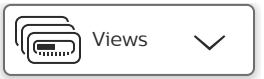

3. In the **Views** list, tap the view you want to use.

2.4.2 Types of Monitoring Windows

Views list icon	Monitoring window contents
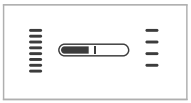 Small manometer	• Small manometer pressure indicator • Breath indicator: When the current breath is triggered by the patient, the circle next to the manometer changes from light green to dark green. • Set parameters
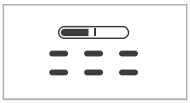 Large manometer with parameters	• Large manometer pressure indicator • Breath indicator: When the current breath is triggered by the patient, the circle next to the manometer changes from light green to dark green. • Six measured and calculated parameters
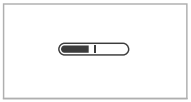 Large manometer	• Large manometer pressure indicator • Breath indicator: When the current breath is triggered by the patient, the circle next to the manometer changes from light green to dark green.
Battery status	• Battery status • Estimated battery time remaining (for internal and detachable batteries) • Estimated remaining battery power shown as a percent of total capacity (for external battery)

3. Device Setup

3.1 Overview

To set up Trilogy Evo, follow the steps shown below. See the accompanying section for instructions.

1. “Placement” on page 20
2. “Connecting AC Power” on page 20
3. “Installing Filters” on page 21
4. “Connecting a Circuit” on page 21
5. “Connecting External Patient Monitors” on page 25 (optional step)
6. “Adding Oxygen” on page 25
7. “Starting Trilogy Evo” on page 26

3.2 Placement

Place Trilogy Evo on a stable, flat, hard surface. Air must flow freely. Do not block the air vents with items such as bedding or curtains. Do not place Trilogy Evo near any heating or cooling equipment or air supplies such as forced air vents, radiators, or air conditioners. Be sure the USB and detachable battery panel doors remain closed when not in use.

If the device has been stored outside the normal operating temperature stated in “Technical Data” on page 82, be sure the device reaches operating temperature before starting.

See “EMC Information” on page 90 for guidance on possible electromagnetic interference.

3.3 Connecting AC Power

Use the AC cord provided to connect AC power. Verify Trilogy Evo is using AC power, indicated by the green LED light next to the On/Off (Standby) button.

To use another power source, such as a battery, see “Power Management” on page 75.

3.4 Installing Filters

3.4.1 Air-Inlet Foam Filter

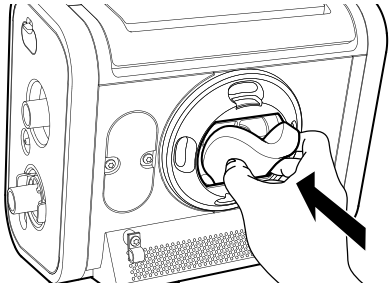

Be sure the air-inlet foam filter is installed correctly.

To install the air-inlet foam filter, pinch the filter as you press it into the filter cover as shown. Position it securely behind the top and bottom restraints.

3.5 Connecting a Circuit

Be certain that any bacterial filter used with this device complies with ISO 23328-1 and ISO 23328-2. To prevent patient or ventilator contamination, you must use a Philips Respironics-approved main flow bacterial filter on the patient gas outlet port. Filters not approved by Philips Respironics may degrade system performance. For a list of accessories, see the Trilogy Evo accessories guide.

For passive circuits, a leak device is mandatory during invasive ventilation or when using a circuit with a non-vented mask.

After you connect the circuit, you may calibrate the circuit. See “Calibration” on page 57.

3.5.1 Passive Single Limb Circuits

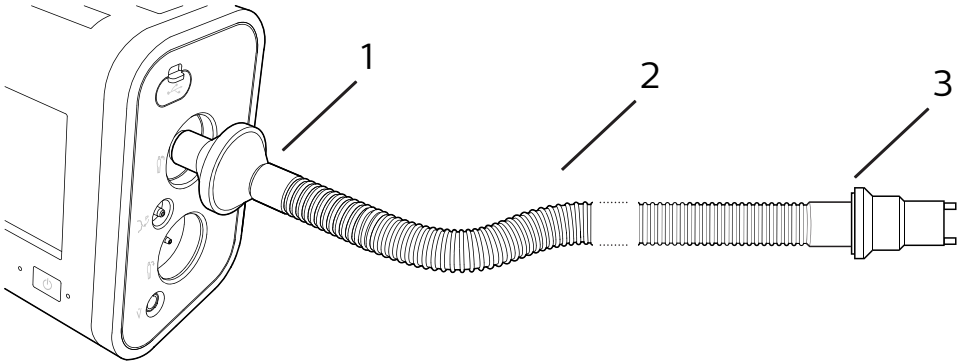

1	Bacterial filter
2	Tubing
3	Leak device

Connect the bacterial filter (1) on the circuit to the inspiratory port.

3.5.2 Active PAP Circuits

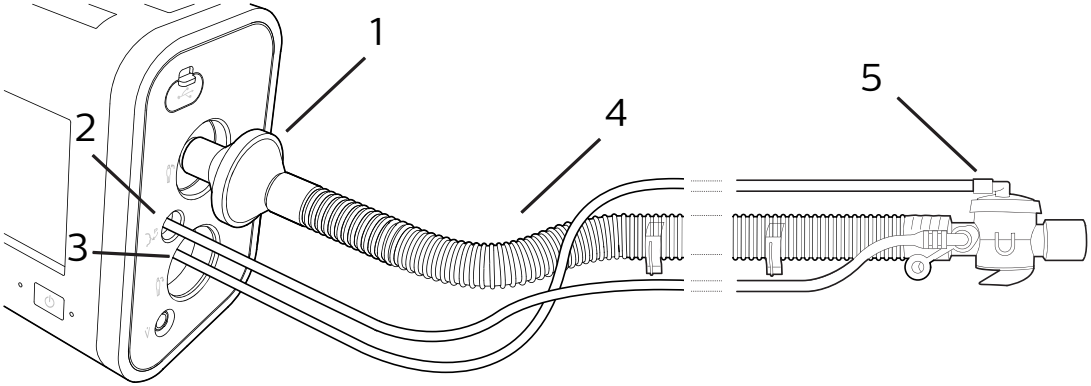

1	Bacterial filter
2	Proximal pressure port
3	Active exhalation valve line connection
4	Tubing
5	Active exhalation valve

1. Connect the bacterial filter (1) on the circuit to the inspiratory port.
2. Connect the proximal pressure line to the proximal pressure port (2).
3. Connect the active exhalation valve pressure line to the active exhalation valve line connection (3).

3.5.3 Active Flow Circuits

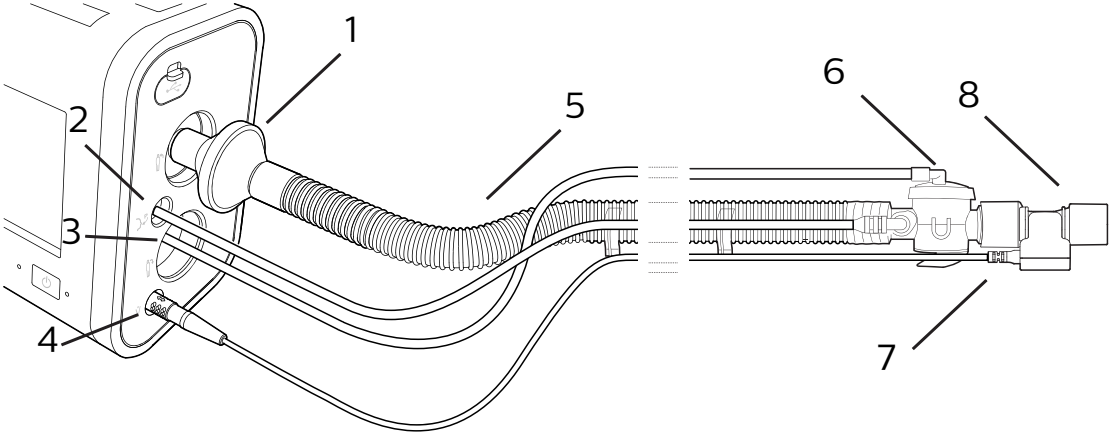

1	Bacterial filter
2	Proximal pressure port
3	Active exhalation valve line connection
4	Flow sensor cable connector
5	Tubing
6	Active exhalation valve
7	Flow sensor cable
8	Flow sensor connected to circuit

1. Connect the bacterial filter (1) on the circuit to the inspiratory port.
2. Connect the proximal pressure line to the proximal pressure port (2).
3. Connect the active exhalation valve pressure line to the active exhalation valve line connection (3).
4. Connect the flow sensor (8) to the flow sensor cable (7).
5. Connect the flow sensor to the active exhalation valve on the circuit (6).
6. Connect the flow sensor cable to the ventilator (4).

3.5.4 Dual Limb Circuits

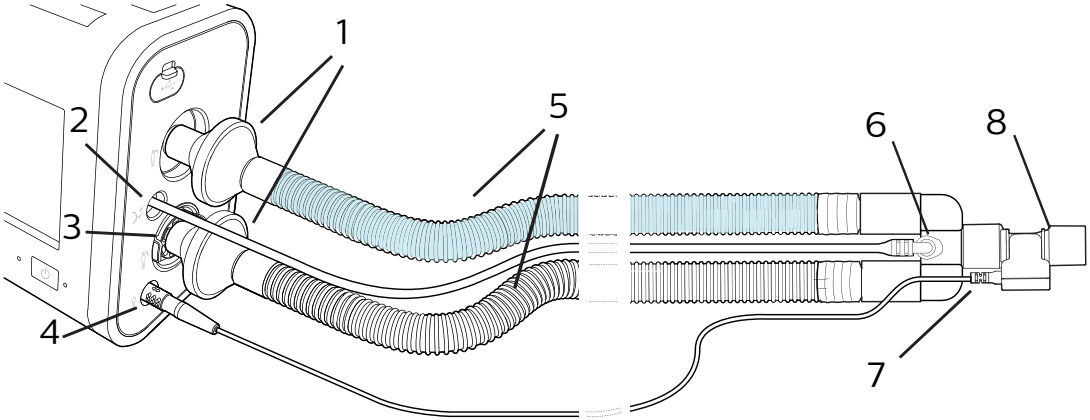

1	Bacterial filters
2	Proximal pressure port
3	Dual-limb active exhalation valve (AEV)
4	Flow sensor cable connector
5	Tubing
6	Y-shaped connector
7	Flow sensor cable
8	Flow sensor connected to circuit

1. Attach the bacterial filter (1) end of the colored inspiration tube to the inspiratory port.
2. Attach the proximal pressure line (2) to the proximal pressure port.
3. Install the AEV. Press until you hear two clicks (3).
4. Attach the bacterial filter end of the clear expiration tube to the AEV (3).
5. Connect the flow sensor (8) to the flow sensor cable (7).
6. Connect the flow sensor to the Y-shaped connector on the circuit (6).
7. Connect the flow sensor cable to the ventilator (4).
8. Attach the proximal pressure line to the Y-shaped connector on the circuit (6).

3.6 Connecting External Patient Monitors

Connect any external patient monitors, such as a pulse oximeter or CO_2 monitor, if using. The device includes two USB ports that are capable of communicating with patient monitoring accessories. For help, see the accessory's instructions and "Accessories" on page 71.

3.7 Adding Oxygen

Warning: Do not operate the ventilator in the presence of flammable gasses. This could cause a fire or explosion.

3.7.1 Low Flow Oxygen

Delivered oxygen concentration varies with changes in flow in the circuit. The following may have an impact on oxygen concentration:

- Pressure settings
- Patient Tidal Volume
- Peak Inspiratory Flow
- I:E Ratio
- Respiratory rate
- Circuit leak rate
- Oxygen flow rate

Warnings:

- This device DOES NOT alarm for loss of the low flow oxygen supply. Use a pulse oximeter or FiO2 sensor, as medically indicated.
- The oxygen concentration may not be consistent. The inspired oxygen concentration will vary, depending on the pressures, patient flow, and circuit leak. Substantial leaks may reduce the inspired oxygen concentration to less than the expected value. Use appropriate patient monitoring, such as pulse oximeter or FiO_2 sensor with alarm, as medically indicated.
- Do not connect the device to an unregulated or high-pressure oxygen source.
- The device may result in incorrect flow and tidal volume measurements and improper operation of related alarms if you add low flow oxygen directly into the patient circuit or mask instead of directly adding it into the oxygen inlet on the back of the ventilator.
- Turn off oxygen when the device is not in use. When the device is not in operation and the oxygen flow remains on, oxygen delivered into the tubing may accumulate within the device's enclosure.

To add oxygen to the circuit, the oxygen supply must comply with the local regulations for medical oxygen. The oxygen flow into the oxygen valve cannot exceed 30 L/min and the pressure cannot exceed 10 psi.

To connect low flow oxygen:

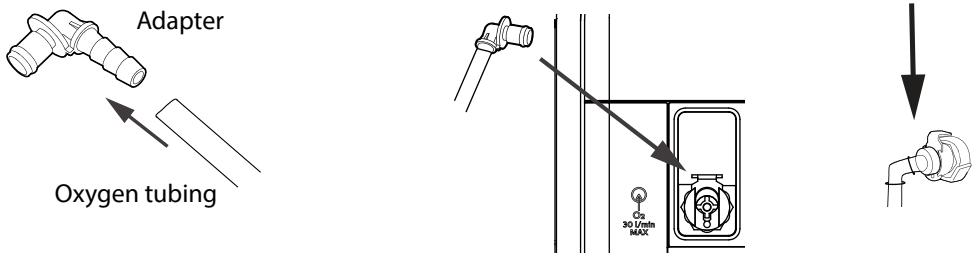

1. Connect the oxygen tubing to the O_2 adapter supplied with the device.
2. Connect the O_2 adapter to the low flow oxygen inlet on the Utility Panel by pressing down on the valve.

3.8 Starting Trilogy Evo

To start Trilogy Evo:

1. Visually inspect Trilogy Evo and all accessories, cords, and tubes attached to the device.
2. Verify that circuit connections are secure.
3. Press the On/Off (Standby) button.
4. Listen for a minimum of three beeps as the device performs system startup checks. The beeps test alarm signals to ensure proper function. Ensure no system messages appear.
5. Watch as the light bar and Alarm Silence button blink once red and once yellow.
6. Confirm the power sources you have connected are working and that power is sufficient. See “Power Management” on page 75.

4. Device Operation

4.1 Overview

After setting up the device, it is ready for operation.
Sections in this chapter:

- “Starting and Stopping Therapy” on page 27
- “Actions During Ventilation” on page 27

4.2 Starting and Stopping Therapy

To *start* therapy from standby:

In the **Prescription Settings** window, select the prescription you want to use. and then tap **Start Ventilation**.

To stop therapy and put the device into the *standby* state:

Press the On/Off (Standby) button on the front panel. ⏻ On the confirmation window, tap **Standby**.

To turn the device *off*:

Press the On/Off (Standby) button on the front panel. ⏻ On the confirmation window, tap **Power Off**.

4.3 Actions During Ventilation

4.3.1 Using Different Prescriptions

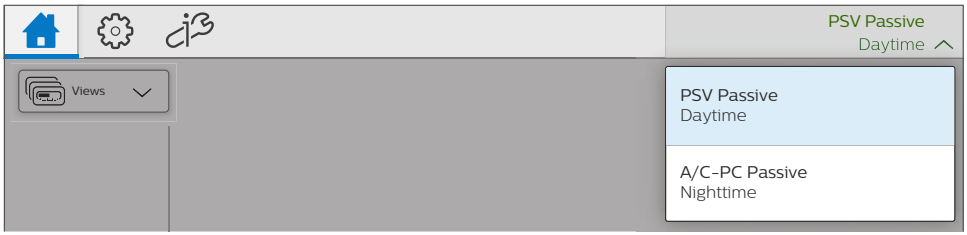

To select a prescription that uses a circuit type that is the *same as the current prescription*:

1. On the menu bar, tap the Home icon to go to the home window.

2. On the menu bar, tap the active prescription to expand the prescription list.
3. Tap the prescription you want to use and then confirm your choice.

To select a prescription that uses a circuit type that is *different from the current prescription*:

1. Press the On/Off (Standby) button on the front panel. On the confirmation window, tap **Standby**.
2. Attach the circuit type that corresponds to the prescription.
3. In the home window workspace, tap the prescription you want to use.
4. Tap **Start Ventilation**.

4.3.2 Locking and Unlocking the Screen

To lock the screen, expand the **Device Actions** menu then tap the **Lock Screen** button.

To unlock the screen, tap the screen. On the screen unlock dialog box, tap and hold **Yes** for three seconds.

When an alarm or system message becomes active, the screen saver is stopped and the automatic screen lock is disabled. For more information, see “Alarms and System Messages” on page 29.

4.3.3 AVAPS Algorithm Restart

4.3.3.1 Description

This feature requires AVAPS to be in use. This feature gives you the ability to reset the algorithms that automatically adjust the pressure.

During active therapy, in the Status Bar, tap the algorithm restart button. AVAPS

Applicable therapy modes:

- AVAPS-AE
- Modes with AVAPS enabled:
  - A/C-PC
  - PSV
  - S/T

5. Alarms and System Messages

5.1 Overview

Trilogy Evo generates audible and visual alarms to alert you when conditions require attention. Alarm data is recorded in the Alarm and Event Log. For help, see "Alarm and Event Log" on page 62.

Alarm settings are retained when power is lost.

Warnings:

- To prevent death or serious injury, monitor the patient and the ventilator regularly to determine the need to provide emergency ventilation when an alarm sounds or the ventilator malfunctions. Always test the alarms after changing the circuit or prescription.
- An increase in circuit resistance can prevent proper operation of some alarms.
- When adding any components to the breathing system, the flow resistance and dead space of the added components such as humidifiers, speaking valves, Heat Moisture Exchangers (HMEs) and filters should be carefully considered in relation to the potential for adverse effects on the patient's ventilator management and device alarms.
- Do not rely on any single alarm to detect a disconnected circuit. Certain components may affect the performance of the alarms chosen to signal that a circuit is disconnected. Use the apnea, low tidal volume, low minute ventilation, and low respiratory rate alarms in conjunction with the circuit disconnect alarm. Test these alarms daily and after you change ventilator settings.

Sections in this chapter:

- "About Alarms" on page 29
- "The Alarm List" on page 31
- "Setting the Alarm Volume" on page 31
- "Responding to an Alarm" on page 32
- "Alarms and System Messages" on page 32
- "Testing Alarms" on page 52

5.2 About Alarms

When an alarm is active, the following indicators occur:

- An Alarm list appears in the menu bar.
- An Alarm light bar flashes red or yellow, or glows steady red or yellow, depending on the alarm level. To turn the light bar on or off, see "Device Options" on page 56.
- The Alarm Silence button on the device flashes red or yellow, or glows steady red or yellow, depending on the alarm level.
- An audible alarm sounds.

The device uses three alarm levels:

- High Priority – Requires an immediate response
- Medium Priority – Requires a prompt response
- Low Priority – Requires awareness

System messages inform you about changing conditions. These messages are described in "Alarms and System Messages" on page 32.

When an alarm or system message becomes active, the screen saver stops and the screen unlocks automatically.

When patient monitors such as a CO_2, FiO_2, or SpO_2 sensor are used, related alarm settings only appear when the ventilator detects sensor connection. Alarm settings are stored in the system. So if a sensor becomes disconnected, the alarm settings are restored upon reconnection.

Alarm and Message Indicators

Icon	Description	Light and sound indicators
	High priority alarm	Light bar flashes red
		Audible alarm repeats rapidly
	Medium priority alarm	Light bar flashes yellow
		Audible alarm repeats moderately
	Low priority alarm	Light bar glows steady yellow
		Audible alarm repeats slowly
	System message	Single beep
	Resolved alarm or system message	None

5.3 The Alarm List

The Alarm List appears in the menu bar. The list is sorted by priority and then by time. The most urgent, most recent alarm appears at the top of the list. An alarm counter shows the number of active alarms.

Tap the alarm list to expand it and view the alarms. Tap the up and down arrows to navigate through the list.

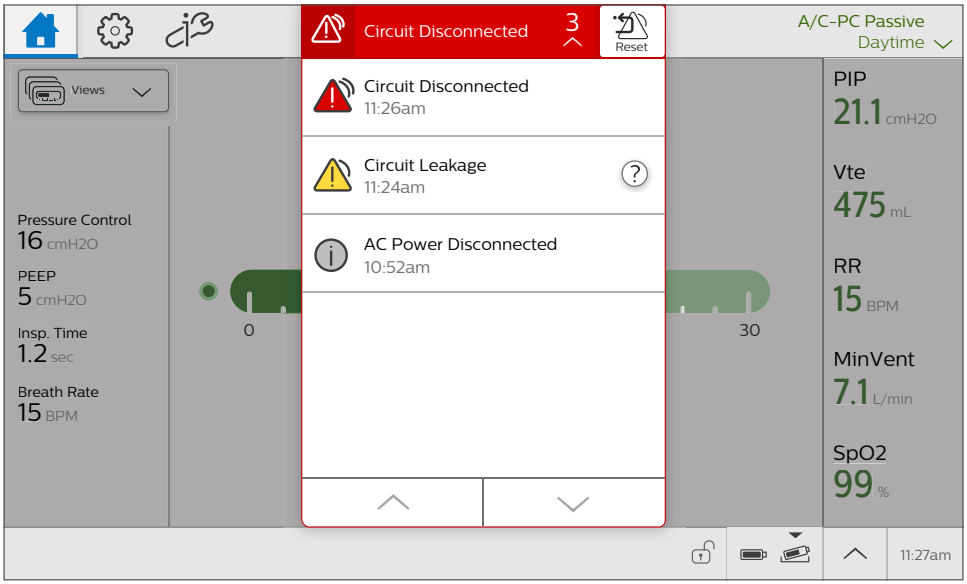

When an alarm-triggering condition is no longer present, the alarm status changes to Resolved. The alarm or message remains visible but disabled in the list until you reset the alarm list. The Alarm Reset icon resets all active and resolved alarms.

To reset the alarm list, tap the **Alarm Reset** icon.

5.4 Setting the Alarm Volume

Warning: Be sure the alarm volume is set loud enough for the caregiver to hear it. Consider the use of a remote alarm or nurse call system. If you do use a remote alarm or nurse call system, fully test it before starting ventilation.

To set the alarm volume:

1. In the menu bar, tap the Options icon.
2. In the **Options** window, tap **Device Options**.
3. In the **Device Options** window, tap **Alarm Volume**.
4. On the **Alarm Volume** dialog box, select the volume you want and then tap the **Accept** checkmark.

5.5 Responding to an Alarm

Warning: Visually monitor the patient and ventilator at all times during an alarm silence period. Allowing alarms to continue without intervention may result in harm to the patient.

When an alarm occurs:

1. Be sure the patient has adequate ventilation and oxygen. If required, provide an alternate method of ventilation.
2. Tap the **Alarm List** to view all alarms and messages. If you see the help icon, you can tap it for more information.
3. If you want to silence the alarm temporarily, press the **Alarm Silence** button on the device to pause all audible alarms for 2 minutes.
4. Take action to resolve the alarm. For help on specific alarms, see "Alarms and System Messages" on page 32.

5.6 Alarms and System Messages

This section contains the details of each alarm and system message:

5.6.1 High-Priority System Alarms

5.6.1.1 Ventilator Inoperative

Priority	High
Why it occurs	The system self-test indicates a failure or malfunction of a component. The failure causes therapy to stop or not meet essential performance criteria.
What to do	Provide an alternate method of ventilation then contact customer service.
Device performance	Therapy is stopped. Both audible and visual alarms are continuous. Depending on the systems impacted, you may or may not see a message on the screen.

5.6.1.2 Ventilator Service Required

Priority	High
Why it occurs	This alarm occurs when the device cannot perform to specification, a backup safety feature is compromised, or the delivery of therapy is compromised. The device continues to function (possibly in a reduced capacity mode).
What to do	Contact customer service.
Device performance	The device continues to function (possibly in a reduced capacity mode). If the problem is not corrected, the device will generate a reminder message until the issue is corrected. If therapy is stopped, a reminder message will immediately appear when therapy is turned on again.

5.6.1.3 Obstruction

Priority	High
Why it occurs	The ventilator detects an obstruction in the patient's inhalation path, exhalation path, or external flow sensor. The ventilator detects that the leak device is missing.
What to do	• Check the circuit. Is it kinked or pinched? • Check the bacterial filter. Is it blocked? • If using an Active Flow or Dual Limb circuit, check the HME. Is it blocked? • Is the leak device blocked or missing? • Is the external flow sensor blocked
Device performance	The device automatically opens the active exhalation valve and continues to function.

5.6.1.4 High Expiratory Pressure

Priority	High
Why it occurs	During the expiratory phase, the delivered pressure exceeds the target patient pressure by 5 cm H_2O or more.
What to do	• Check the circuit. Is it kinked or pinched? • Is the leak device blocked or occluded? Note: This alarm condition may be due the patient having a fast breath rate.
Device performance	The alarm is automatically resolved when the delivered pressure comes within 5 cm H_2O of the target patient pressure during the expiratory phase. The device continues to function.

5.6.1.5 High Inspiratory Pressure (pressure modes)

This High Inspiratory Pressure alarm applies to pressure modes only. For the High Inspiratory Pressure alarm that applies to volume modes, see "High Inspiratory Pressure (volume modes)" on page 39.

Priority	High
Why it occurs.	Applies to A/C-PC, SIMV-PC, PSV, S/T, or AVAPS-AE therapy modes. During the inspiratory phase, the delivered pressure exceeds the target patient pressure by 5 cm H_2O or more.
What to do.	Check the patient. • Is the patient coughing? • Does the patient have excessive secretions? • Is the patient having bronchospasms? • Is the tracheotomy tube stable? Check the ventilator. • Is the circuit kinked or pinched? • Is the leak device blocked? • Is the exhalation device blocked? • Are secretions in the HME?
Device performance	Inspiration is terminated with this alarm. The device automatically cycles to the expiratory phase and continues to function. The system resolves the alarm when the pressure returns to a normal value.

5.6.1.6 External Flow Sensor Failed

Priority	High
Why it occurs	A flow sensor offset or sensor failure is detected when the device is in standby or delivering therapy.
What to do	• Are the sensor and cable connected? • Are the sensor and cable damaged? • Clean if needed. • Replace if necessary.
Device performance	• The device continues to provide therapy at the set breath rate. • Volume control performance is reduced. • The ability to trigger on a patient-initiated breath is reduced. • Displays and alarms that use flow measurement, such as tidal volume, might not function properly. • Displays and alarms that use pressure measurement continue to function.

5.6.1.7 External Flow Sensor Cable Disconnected

Priority	High
Why it occurs	The external flow sensor cable becomes disconnected from the ventilator during active therapy. Active flow or dual limb circuit is selected and an external flow sensor cable is not connected.
What to do	• Are the sensor and cable connected? • Are they damaged? • Replace if necessary.
Device performance	• The device continues to provide therapy at the set breath rate. • Volume control performance is reduced. • The ability to trigger on a patient-initiated breath is reduced. • Displays and alarms that use flow measurement, such as tidal volume, might not function properly. • Displays and alarms that use pressure measurement continue to function.

5.6.1.8 External Flow Sensor Not Connected

Priority	High
Why it occurs	The external flow sensor becomes disconnected from the external flow sensor cable during active therapy.
What to do	• Are the sensor and cable connected? • Are they damaged? • Replace if necessary.
Device performance	• The device continues to provide therapy at the set breath rate. • Volume control performance is reduced. • The ability to trigger on a patient-initiated breath is reduced. • Displays and alarms that use flow measurement, such as tidal volume, might not function properly. • Displays and alarms that use pressure measurement continue to function.

5.6.1.9 External Flow Sensor Reversed

Priority	High
Why it occurs	The external flow sensor is connected backwards during active therapy.
What to do	Check the sensor position. The arrow direction should align with the air delivered to the patient.
Device performance	• The device continues to provide therapy at the set breath rate. • Volume control performance is reduced. • The ability to trigger on a patient-initiated breath is reduced. • Displays and alarms that use flow measurement, such as tidal volume, might not function properly. • Displays and alarms that use pressure measurement continue to function.

5.6.1.10 Active Exhalation Valve Failed

Priority	High
Why it occurs	The active exhalation valve is stuck closed.
What to do	• Single-limb active circuit: check all connections to the valve and check that the valve is clear. • Dual limb circuit: check that the valve is clear. • Replace the circuit or valve if necessary.
Device performance	Therapy delivery will be compromised. All displays and alarms will continue to function.

5.6.1.11 Check AEV Pilot Line

Priority	High
Why it occurs	The active-exhalation pressure control line is not connected, becomes disconnected, or contains water droplets that affect the active exhalation valve line pressure reading.
What to do	Inspect the line. Empty or replace it if necessary.
Device performance	Therapy delivery will be compromised. All displays and alarms will continue to function.

5.6.1.12 Proximal Pressure Line Disconnected

Priority	High
Why it occurs	The proximal pressure line is not connected.
What to do	• Is the line connected at both ends? • Is the line clean and not tangled? • Be sure the main circuit is connected and does not have large leaks. • Be sure the exhalation valve is intact.
Device performance	The system resolves the alarm when the proximal pressure line connection is correct. Pressure displays and alarms do not function. Therapy delivery is not compromised.

5.6.1.13 Circuit Disconnected (MPV)

Priority	High
Why it occurs	When using mouthpiece ventilation, the system detects the circuit is disconnected.
What to do	Reconnect the circuit.
Device performance	The device continues to function.

5.6.2 High-Priority Patient Alarms with Variable Settings

5.6.2.1 Apnea

Priority	High
Why it occurs	Time between patient-initiated breaths is more than the alarm setting.
What to do	• Is the circuit connected to the patient? • Is there a leak or disconnect? • Is the circuit kinked or pinched?
Device performance	The alarm is automatically resolved when two patient breaths are detected that occur within set interval. The device continues to function.

5.6.2.2 Circuit Disconnected

Warning: You should not rely on any single alarm to detect a circuit disconnect condition. Use the following alarms along with the Circuit Disconnected alarm:

- Low Tidal Volume
- Low Minute Ventilation
- Low Respiratory Rate
- Apnea

Priority	High
Why it occurs	The patient is not connected to the ventilator breathing circuit or there is a large leak.
What to do	• Is the circuit connected to the patient? • Is the circuit connected to the ventilator? • Does a large unplanned leak exist?
Device performance	The system resolves the alarm when the circuit is reconnected or the excessive leak is fixed. The device continues to function.

5.6.2.3 Low MinVent (Low Minute Ventilation)

Priority	High
Why it occurs	The patient's minute ventilation is less than or equal to the alarm setting. Or, no breath has occurred for 15 seconds.
What to do	• Is the circuit kinked or pinched? • Does the circuit have a leak or disconnect? • Remove excessive water from the tubing. • Is the bacterial filter blocked or not connected? • Is the leak device blocked or not connected? • Check the patient.
Device performance	The system resolves the alarm when the minute ventilation is greater than the alarm setting. The device continues to function.

5.6.2.4 Low Respiratory Rate

Priority	High
Why it occurs	The patient's respiratory rate is less than or equal to the low respiratory rate alarm setting. Or, no breath has occurred for 15 seconds.
What to do	• Is the circuit kinked or pinched? • Does the circuit have a leak? • Is the circuit connected? • Check the patient.
Device performance	The system resolves the alarm when the respiratory rate is more than the alarm setting. The device continues to function.

5.6.2.5 High Inspiratory Pressure (volume modes)

This High Inspiratory Pressure alarm applies to volume modes only. For the High Inspiratory Pressure alarm that applies to pressure modes, see "High Inspiratory Pressure (pressure modes)" on page 34.

Priority	This alarm occurs in several stages and escalates from an audible beep, to a medium priority alarm, then to a high priority alarm if the condition persists
Why it occurs.	Applies to volume modes. The measured patient pressure exceeds the High Inspiratory Pressure setting.
What to do.	Check the patient. • Is the patient coughing? • Does the patient have excessive secretions? • Is the patient having bronchospasms? • Is the tracheotomy tube stable? Check the ventilator. • Is the circuit kinked or pinched? • Is the leak device blocked? • Is the exhalation device blocked? • Are secretions in the HME?
Device performance.	Inspiration is terminated with this alarm. The device automatically cycles to the expiratory phase and continues to function. The system resolves the alarm when the pressure returns to a normal value.

5.6.2.6 No Trigger

Priority	High
Why it occurs	Applies to mouthpiece ventilation. The time between patient-triggered breaths is greater than the No Trigger alarm setting.
What to do	• Check the patient. • Is the circuit within reach? • Is the circuit intact? • Is the PEEP high enough to generate sufficient signal flow when the mouthpiece is touched?
Device performance	The device continues to function.

Alarm Settings	0.5 to 15 minutes in increments of 0.5 minutes.

5.6.3 Medium-Priority System Alarms

5.6.3.1 Circuit Leakage

Priority	Medium
Why it occurs	In the Active PAP circuit, a leak in the active exhalation valve is detected
What to do	• Is the valve or either line kinked or pinched? • Does the circuit or either line have a leak? • Is the circuit and AEV connected at both ends? • Is the valve damaged? • Can it open and close?
Device performance	The system resolves the alarm when the circuit is reconnected or the valve is fixed. The device continues to function.

5.6.3.2 Rebreathing Detected

Priority	Medium
Why it occurs	The ventilator detects the potential for the inhalation of exhaled gases.
What to do	• Is the leak device partially clogged? • Is the exhalation valve attached? • Increase expiratory leak flow.
Device performance	The alarm is automatically resolved when the condition of rebreathing is removed. The device continues to function.

5.6.3.3 Volume Under Delivery

Priority	Medium
Why it occurs	Applies to A/C-VC and SIMV-VC therapy modes. A system limit is reached and the set volume cannot be reached for 3 consecutive breaths.
What to do	• Check the patient. • Is the circuit blocked? • Is the airway blocked? • Is the high pressure alarm limit correct? • Review these settings to make sure they are correct. — Inspiratory Time — Tidal Volume — Flow Pattern • Make sure the patient and ventilator are aligned by looking at the waveforms and changing the trigger settings.
Device performance	The device continues to function. The device attempts to deliver the set therapy. All monitored parameters and alarms continue to function.
Algorithm summary	These modes are designed to regulate the tidal volume on each breath, thus the alarm is generated when the inhaled tidal volume is less than or equal to 85% of the tidal volume setting for 3 consecutive breaths.

5.6.3.4 Loss of CO_2 Signal

Priority	Medium
Why it occurs	The High $EtCO_2$ alarm or Low $EtCO_2$ alarm is enabled and the sensor has reported valid data for 3 continuous seconds. Then one of the following happens: • The $EtCO_2$ sensor reports invalid data. • The sensor signal is lost. • No breaths are detected for more than 10 seconds during therapy.
What to do	• Is the sensor attached to the ventilator? • Is the sensor attached to the circuit?
Device performance	The systems resolves the alarm when the sensor is properly attached and reporting data. The device continues to function.

5.6.3.5 Loss of SpO_2 Signal

Priority	Medium
Why it occurs	One of the following alarms is enabled: • Low SpO_2 • High SpO_2 • Low Pulse Rate • High Pulse Rate And the oximeter has reported valid data for 3 seconds. But then, while in the therapy or standby state, one of the following occurs. • The oximeter reports invalid data. • The oximeter is not connected for more than 10 seconds.
What to do	• Be sure that the SpO_2 sensor is properly attached to the patient. Reposition if necessary. • Be sure all cables are connected.
Device performance	The device continues to function. The system resolves the alarm when the oximeter reports data for more than 10 seconds.

5.6.3.6 CO_2 Sensor Adapter Zero Required

Priority	Medium
Why it occurs	The CO_2 sensor requests a zero (reset) during therapy.
What to do	Reset the CO_2 level. See "CO_2 Sensor Adapter Zero" on page 60.
Device performance	CO_2 displays and alarms do not function. The device continues to function.

5.6.3.7 Check/Change CO_2 Airway Adapter

Priority	Medium
Why it occurs	The CO_2 sensor reports that a check is required during therapy.
What to do	Check the CO_2 sensor.
Device performance	CO_2 displays and alarms do not function. The device continues to function.

5.6.3.8 CO_2 Sensor Failure

Priority	Medium
Why it occurs	The CO_2 sensor reports a fault during therapy.
What to do	• Disconnect and then reconnect the sensor. • Replace the sensor.
Device performance	CO_2 displays and alarms do not function. The device continues to function.

5.6.3.9 FiO_2 Sensor Disconnected

Priority	Medium
Why it occurs	The High FiO_2 alarm or Low FiO_2 alarm is enabled and the sensor has become disconnected.
What to do	• Be sure that the FiO_2 sensor is connected. • Replace the sensor, if needed.
Device performance	• FiO_2 monitoring is lost until the sensor issue is resolved. • The device continues to function.

5.6.3.10 Replace FiO_2 Sensor

Priority	Medium
Why it occurs	The High FiO_2 alarm or Low FiO_2 alarm is enabled and the sensor has failed or reached its end of life..
What to do	• Replace the sensor. • To continue therapy without alarming, either remove the sensor or disable FiO_2 in Device settings.
Device performance	• FiO_2 monitoring is ineffective or is no longer functioning. • The device continues to function.

5.6.3.11 Low Expiratory Pressure

Priority	Medium
Why it occurs	During the expiratory phase, the delivered pressure is 5 cm H_2O or more below the target patient pressure.
What to do	• Does the circuit have a leak? • Is the circuit connected? • Is the circuit kinked or pinched?
Device performance	The system resolves the alarm when the delivered pressure comes within 5 cm H_2O of the target patient pressure during the expiratory phase. The device continues to function.

5.6.3.12 Low Inspiratory Pressure (pressure modes)

This Low Inspiratory Pressure alarm applies to pressure modes only. For the Low Inspiratory Pressure alarm that applies to volume modes, see "Low Inspiratory Pressure Alarm (volume modes)" on page 46

Priority	Medium
Why it occurs	Applies to A/C-PC, SIMV-PC, PSV, S/T, or AVAPS-AEn therapy modes. During the inspiratory phase, the delivered pressure is 5 cm H_2O or more below the target patient pressure.
What to do	• Does the circuit have a leak? • Is the circuit connected? • Is the circuit kinked or pinched?
Device performance	The system resolves the alarm when the delivered pressure comes within 5 cm H_2O of the target patient pressure during the inspiratory phase. The device continues to function.

5.6.4 Medium-Priority Patient Alarms with Variable Settings

5.6.4.1 High Tidal Volume

Priority	Medium
Why it occurs	*Passive, active flow, or dual limb circuit types*: The estimated exhaled tidal volume is more than or equal to the alarm setting for a number of breaths depending on the therapy mode: • Three consecutive breaths: A/C-PC, CPAP, PSV, S/T, SIMV-VC, and SIMV-PC • Six consecutive breaths: A/C-VC When AVAPS is enabled, this alarm occurs when the Tidal Volume is more than or equal to the alarm threshold for one minute and IPAP is less than or equal to (IPAP min + 1 cm H_2O). *Active PAP circuit type*: The delivered tidal volume is more than or equal to the alarm setting for three consecutive breaths.
What to do	• Is the circuit kinked or pinched? • Is the active exhalation valve attached? Note: For active flow and dual limb circuits, low flow O_2 or a nebulizer may increase tidal volumes above the alarm setting.
Device performance	The system resolves the alarm when a breath occurs in which the exhaled tidal volume is below the alarm setting. The device continues to function.

5.6.4.2 Low Tidal Volume

Priority	Medium
Why it occurs	*Passive, active flow, or dual limb circuit types*: The estimated exhaled tidal volume is less than or equal to the low tidal volume alarm setting for a number of breaths depending on the therapy mode: • Three consecutive breaths: A/C-PC, CPAP, PSV, S/T, SIMV-VC, and SIMV-PC • Six consecutive breaths: A/C-VC The delivered tidal volume is less than or equal to the low tidal volume setting. When AVAPS is enabled, this alarm occurs when the Tidal Volume is less than or equal to the alarm setting for one minute and IPAP is greater than or equal to (IPAP max - 1 cm H_2O). *Active PAP circuit type*:
What to do	• Is the circuit kinked or pinched? • Is the leak device blocked or clogged? • Is the leak device connected? • Is the diaphragm in the active exhalation device placed correctly? • Does the mask fit? • Do you need to change the mask?
Device performance	*Passive, active flow, or dual limb circuit types*: The system resolves the alarm when a breath occurs in which the exhaled tidal volume is more than the alarm setting. The device continues to function. *Active PAP circuit type*: The system resolves the alarm when a breath occurs in which the exhaled tidal volume is more than the alarm setting. The device continues to function.

5.6.4.3 High MinVent (High Minute Ventilation)

Priority	Medium
Why it occurs	The patient's minute ventilation is more than or equal to the high minute ventilation alarm setting.
What to do	Check the patient.
Device performance	The system resolves the alarm when the minute ventilation is less than the alarm setting. The device continues to function.

5.6.4.4 High Respiratory Rate

Priority	Medium
Why it occurs	The respiratory rate is more than the alarm setting. When the trigger type is 'Off' then the spontaneous respiratory rate does not trigger the alarm.
What to do	• Check the patient. • Is the trigger too sensitive?
Device performance	The system resolves the alarm when the respiratory rate is less than the alarm setting. The device continues to function.

5.6.4.5 Low Inspiratory Pressure Alarm (volume modes)

This Low Inspiratory Pressure alarm applies to volume modes only. For the Low Inspiratory Pressure alarm that applies to volume modes, see "Low Inspiratory Pressure (pressure modes)" on page 44.

Priority	Medium
Why it occurs	Applies to volume modes. The measured peak inspiratory pressure is less than or equal to the alarm setting.
What to do	• Could patient changes have caused this alarm? Such as excessive patient inspiratory effort? • Is the circuit kinked or pinched? • Is there a leak in the circuit? • Is the circuit connected?
Device performance	The system resolves the alarm when the peak inspiratory pressure is more than the alarm setting. The device continues to function.

5.6.4.6 Low SpO_2

Priority	Medium
Why it occurs	The measured SpO_2 is less than or equal to the alarm setting for 10 seconds during therapy or in the standby state.
What to do	• Check the patient. • Check all oxygen connections. • Is the oxygen source appropriate? • Are the therapy settings appropriate?
Device performance	The system resolves the alarm when the SpO_2 is more than the alarm setting. The device continues to function.

5.6.4.7 High SpO_2

Priority	Medium
Why it occurs	The measured SpO_2 is greater than or equal to the alarm setting for 10 seconds during therapy or in the standby state.
What to do	• Check the patient. • Is the oxygen source appropriate? • Are the therapy settings appropriate?
Device performance	The system resolves the alarm when the SpO_2 is less than the alarm setting. The device continues to function.

5.6.4.8 Low $EtCO_2$

Priority	Medium
Why it occurs	The measured $EtCO_2$ is less than or equal to the alarm setting for 10 seconds during therapy.
What to do	• Check the patient. • If there is a tracheal tube, is it inserted? • Is the leak excessive? A high leak reduces the $EtCO_2$. • Check the tidal volume, minute ventilation and respiratory rate settings. Are they correct?
Device performance	The system resolves the alarm when the $EtCO_2$ is more than the alarm setting. The device continues to function.

5.6.4.9 High $EtCO_2$

Priority	Medium
Why it occurs	The measured $EtCO_2$ is more than or equal to the alarm setting for 10 seconds during therapy.
What to do	• Passive circuit: check for an insufficient leak • Active and dual limb circuits: be sure the valve is operable
Device performance	The system resolves the alarm when the $EtCO_2$ is less than the alarm setting. The device continues to function.

5.6.4.10 Low FiO_2

Priority	Medium
Why it occurs	The measured FiO_2 is less than or equal to the alarm setting for 10 seconds during therapy.
What to do	• Check the patient. • Check all oxygen connections. • Is the oxygen source appropriate? • Recalibrate the FiO_2 sensor.
Device performance	The system resolves the alarm when the FiO_2 is more than the alarm setting. The device continues to function.

5.6.4.11 High FiO_2

This alarm is disabled when 100% O_2 is active.

Priority	Medium
Why it occurs	The measured FiO_2 is more than or equal to the alarm setting for 10 seconds during therapy.
What to do	• Check the patient. • Is the oxygen source appropriate? • Recalibrate the FiO_2 sensor.
Device performance	The system resolves the alarm when the FiO_2 is less than the alarm setting for 10 consecutive seconds. The device continues to function.

5.6.5 Low-Priority System Alarms

5.6.5.1 Stuck Key

Priority	Low
Why it occurs	An On/Off (Standby) button or Alarm Silence button is stuck for at least 120 seconds.
What to do	Contact customer service.
Device performance	The device continues to function.

5.6.5.2 Inlet Filter Blocked

Priority	Low
Why it occurs	The inlet filter becomes blocked and delivered therapy is reduced.
What to do	• Is the air inlet blocked? • Remove any filter. If the filter is the air-inlet foam filter, rinse it. See "Rinsing the Air-Inlet Foam Filter" on page 67. Otherwise, replace the filter.
Device performance	The device continues to function.

5.6.5.3 Check Proximal Pressure Line

Priority	Low
Why it occurs	The proximal pressure line connection may be faulty. The line may contain water droplets that affect the pressure reading.
What to do	• Is the proximal pressure line connected at both ends? • Is the line clean and untangled? • If necessary, clear the line and reconnect.
Device performance	• Displays and alarms that use the pressure measurement do not function • Displays and alarms that use the flow measurement, such as tidal volume, continue to function • The device continues to function.

5.6.6 Low-Priority Patient Alarms with Variable Settings

5.6.6.1 Low Pulse Rate

Priority	Low
Why it occurs	The pulse oximeter must have reported valid data for the previous three seconds. In the standby and therapy states, the pulse rate is less than or equal to the low pulse rate alarm setting.
What to do	• Check the patient. • Check sensor placement and reposition.
Device performance	The system resolves the alarm when the pulse rate is more than the alarm setting. The device continues to function.

5.6.6.2 High Pulse Rate

Priority	Low
Why it occurs	The pulse oximeter must have reported valid data for the previous three seconds. In the standby and therapy states, the pulse rate is more than or equal to the high pulse rate alarm setting.
What to do	Check the patient.
Device performance	The system resolves the alarm when the pulse rate is less than the alarm setting. The device continues to function.

5.6.7 Power Alarms

5.6.7.1 Low Battery

Warning: If the high-priority “Low Battery” alarm occurs, immediately connect the ventilator to an alternate power source. If no alternate power source is available, immediately place the patient on an alternate source of ventilation.

Priority	*Medium priority* when the last available battery can provide close to 20 minutes of therapy. *High priority* when the last available battery can provide close to 10 minutes of therapy.
Why it occurs	The last battery available is low or nearly depleted.
What to do	• Immediately connect the ventilator to an alternate power source. • If no alternate power source is available, immediately place the patient on an alternate source of ventilation.
Device performance	The device continues to function.

5.6.7.2 AC Power Disconnected

Priority	Low
Why it occurs	AC power is disconnected during therapy or standby states.
Device performance	The device continues to function.

5.6.7.3 Internal Battery in Use

Priority	Low
Why it occurs	• The power source has switched to the internal battery. • You start therapy on internal battery power.
What to do	• Confirm the remaining battery capacity. This is the last available power source. • Prepare an alternative power source such as AC power or an external battery.
Device performance	The device continues to function.

5.6.7.4 Replace Detachable Battery

Priority	Low
Why it occurs	The detachable battery has failed. Or, the battery is nearing the end of its useful life.
What to do	Replace the detachable battery. If the alarm continues, plug the device into an AC power source.
Device performance	The device continues to function. If the condition still exists 60 minutes after you reset the alarm, the alarm repeats.

5.6.7.5 Internal Battery Depleted

Priority	Low
Why it occurs	The internal battery is depleted.
What to do	Connect AC power or an external battery to charge the internal battery.
Device performance	The device continues to function.

5.6.7.6 Loss of All Power

Priority	High
Why it occurs	All power to the device is lost while delivering therapy.
What to do	• Immediately connect the ventilator to an alternate power source. • If no alternate power source is available, immediately place the patient on an alternate source of ventilation.
Device performance	This alarm behaves differently from other high-priority alarms. When all power is lost, the ventilator beeps and LED lights flash. To stop the alarm, press the Audio Pause button or connect a usable power source.

5.6.8 System Messages

Message	Cause
External DC Source Disconnected	Power supplied from an external DC source becomes disconnected or depleted.
External DC Source Depleted	The external DC power source is depleted.
Check External DC Source	An external battery is connected but cannot supply sufficient power. Check for a faulty cable, bad connection, or bad battery.
Detachable Battery Depleted	The detachable battery is depleted.
Internal Battery Not Charging – Temperature	The system is unable to charge the internal battery due to temperature. Change the environmental temperature or relocate the device.
Internal Battery Not Discharging – Temperature	The internal battery is unable to power the device due to temperature. Change the environmental temperature or relocate the device.
Detachable Battery Not Charging – Temperature	The system is unable to charge the detachable battery due to temperature. Change the environmental temperature or relocate the device.
Detachable Battery Not Discharging – Temperature	The system is unable to discharge the detachable battery due to temperature. Change the environmental temperature or relocate the device.
Start On Battery	• Trilogy Evo is turned on and AC power is not detected. Reconnect AC power. • Power is restored after losing all power and AC power is not detected. Reconnect AC power.
Circuit Mismatch	The circuit type selected for use does not match the circuit connected for three consecutive breaths. Check the circuit type. Connect a circuit that matches the prescription. Or, change the circuit type.
Unsupported Accessory Connected	An unsupported accessory is connected to Trilogy Evo.
FiO_2 sensor not calibrated	FiO_2 monitoring is enabled but the FiO_2 sensor was not calibrated
Replace FiO_2 sensor	The FiO_2 sensor is at the end of life or is no longer functioning.
SpO_2 Monitor Connected	Indicates a pulse oximeter is now connected.

5.7 Testing Alarms

Test alarms any time you make a significant change to the system. If the alarm that you are testing does not activate, adjust the alarm settings and retry.

5.7.1 Testing Circuit Disconnection Alarms

For ventilator-dependent patients, do not rely on any single alarm to detect when a circuit is disconnected. One or more of the following alarms may indicate a disconnected circuit.

- Circuit Disconnected
- Low Tidal Volume
- Low Minute Ventilation
- Low Respiratory Rate
- Low Peak Inspiratory Pressure alarms (user settable for volume modes)
- Leakage alarm (Active PAP circuit only)

To test that these alarms detect a circuit disconnection, follow these steps.

1. Be sure the patient is connected to the ventilator and that therapy is stable. Be sure that none of the alarms above are active.
2. Disconnect the circuit at the patient interface. Be sure all circuit accessories remain attached.
3. Confirm that one or more of the alarms listed above activate.
4. Reconnect the circuit and confirm that any active alarm automatically resets.

5.7.2 Testing Circuit Obstruction Alarms

For ventilator-dependent patients, do not rely on any single alarm to detect when a circuit is obstructed. One or more of the following alarms may indicate an obstructed circuit.

- Obstruction
- High Inspiratory Pressure
- Circuit Disconnected
- Low Tidal Volume
- Low Minute Ventilation
- Low Respiratory Rate
- Low Peak Inspiratory Pressure alarms (settable for volume modes)
- Leakage alarm (Active PAP circuit only)
- Rebreathing Detected

To test that these alarms detect a circuit obstruction, follow these steps.

1. Be sure that the patient is connected to the ventilator and that therapy is stable.
2. *For a Passive circuit*: Disconnect the circuit at the patient end, remove the leak device and block the end of the circuit.
   For an Active circuit: Disconnect the circuit at the patient end and block the end of the circuit.
3. Confirm that one or more of the alarms listed above activate.
4. Reconnect the circuit and confirm that any active alarm automatically resets.

5.7.3 Testing the Leakage Alarm

For an Active PAP circuit, the Leakage alarm detects a leak in the active exhalation valve (AEV).

To test the Leakage alarm, follow these steps.

1. Be sure that the patient is connected to the ventilator and that therapy is stable.
2. Disconnect the AEV control line from the ventilator.
3. Confirm that the *Circuit Leakage*, and/or *Check AEV Line* alarm activates.
4. Reconnect the AEV control line and confirm that the alarm automatically resets.

5.7.4 Testing the Low FiO_2 Alarm

This test applies only when low flow oxygen is in use. The Low FiO_2 alarm requires an FiO_2 sensor to be connected and the FiO_2 sensor setting to be turned on.

To test the loss of low flow oxygen, follow these steps.

1. Be sure that the patient is connected to the ventilator and that therapy is stable.
2. Disconnect the oxygen from the ventilator
3. Confirm that the *Low* FiO_2 alarm activates.
4. Reconnect the oxygen and confirm that the alarm automatically clears, which may take 30 seconds or more.

5.7.5 Testing Power Alarms

When a power source is disconnected, Trilogy Evo automatically switches to the next available power source. For the priority of power sources, see "Overview" on page 75. When confirming that the system is using battery power, the In-use Arrow should point to the battery that is providing power. The device should continue to function during these tests.

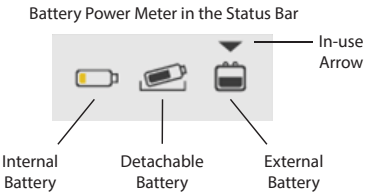

To test the power alarms, follow these steps.

1. Connect the device to AC power.
2. Be sure the device is using AC power. The green LED next to the power button should be lit.

3. Disconnect AC power (pull the power cord out of the outlet).
4. Confirm that the *AC Disconnected* alarm activates.
5. If connected to an external battery, go to the next step. Otherwise go to step 9.
6. Confirm that the power source is the external battery.
7. Disconnect the external battery.
8. Confirm that the *External DC Source Disconnected* system message appears.
9. Confirm that the power source is the detachable battery.
10. Remove the detachable battery.
11. Confirm that the power source is now the internal battery and that the *Internal Battery in Use* alarm activates.

To test the low battery alarm:

This test may require several hours to complete. During the test, if you want to silence the alarm temporarily, press the **Alarm Silence** button on the device to pause all audible alarms for 2 minutes. Because this test is performed during therapy, monitor the patient closely to ensure therapy is not interrupted.

1. Be sure that AC power is available to recharge the batteries at the end of the test.
2. Disconnect external power sources and remove the detachable battery.
3. Continue to allow the device to use internal battery power while delivering therapy.
4. Confirm that the medium-priority *Low Battery* alarm activates and that the device continues to function.
5. Continue to allow the device to use internal battery power. Ensure you monitor the patient.
6. Confirm that the high-priority *Low Battery* alarm activates and that the device continues to function.
7. Insert the detachable battery and reconnect AC power to recharge the batteries.

6. Device Options

6.1 Overview

Use the Options window to change device options, run calibrations and tests, and view and work with data.

The Options window includes the following features:

- “Device Options” on page 56
- “Calibration” on page 57
- “Data Transfer” on page 60
- “Information” on page 62
- “Alarm and Event Log” on page 62
- “Prescription Preferences” on page 63

6.2 Device Options

Use the Device Options feature to customize Trilogy Evo. When working with settings, be sure you save your changes. After 30 seconds of inactivity, the system reverts to the previous setting and your changes are not saved.

To change a setting:

1. In the menu bar, tap the Options icon.
2. In the **Options** window, tap **Device Options**.
3. In the **Device Options** window, tap the setting you want to change.
4. In the option dialog box, make your selection.
5. When your selection is complete, on the title bar, tap the **Accept** checkmark.

Option	Description
Language	Set the device language.
Alarm Volume	Set system alarm loudness.
Screen Brightness	Set screen brightness.
Light Bar	Turn the light bar on or off.
Automatic Touchscreen Lock	Automatically locks the screen after five minutes of inactivity. The screen automatically unlocks during an alarm.
Screen Saver	Select the type of screen saver that you want to use.
Date and Format	Set the system date and format.
Time and Format	Set the system time and select 12- or 24-hour format.

FiO_2 Sensor	Turn the FiO_2 sensor on or off.
NFC	Turn near field communication on or off.
Bluetooth	• *To enable a Bluetooth connection*: tap **Bluetooth**. On the dialog box, tap **On**. A Bluetooth symbol appears in the Status Bar to show when devices are connected. • *To disable a Bluetooth connection*: tap **Bluetooth**. On the dialog box, tap **Off**. • *To clear all devices from memory*: tap **Bluetooth**. On the dialog box, tap **Forget All Devices**. (Disabled when Bluetooth is not enabled.) Note: Bluetooth may not be present in all models.
Data Encryption	• The data on Trilogy Evo is already encrypted. • By enabling Encryption, some additional information will be required to read the data by a certified provider • If the Encryption was enabled and the user selects OFF, all of the patient data will be deleted. We recommend that only the certified provider makes this action.

6.3 Calibration

6.3.1 Circuit Calibration Concepts

A clinician may recommend that you calibrate the circuit. The circuit calibration process includes the following procedures, based on the circuit type:

- *Active circuits*: calibrates according to the results of the leak test, compliance, and resistance
- *Passive circuits*: calibrates according to the compliance and resistance
- *MPV circuits*: not available

When you calibrate the circuit, follow the instructions on the screen as the system completes the tests.

If the calibration is successful, then you will see a confirmation message.

If the circuit fails any part of the test, the reason appears on the screen. Adjust the circuit and repeat the calibration. If you repeat the calibration but the circuit still fails, either replace the circuit and try again or use the default settings.

Information about the circuit calibration is recorded in the Event Log. For help with the Event Log, see “Alarm and Event Log” on page 62.

6.3.1.1 Calibrating a Circuit

To calibrate a circuit, follow these steps.

1. In the menu bar, tap the **Options** icon.
2. In the **Options** window, tap **Calibration & Setup**.
3. In the **Calibration & Setup** window, tap **Circuit Calibration**.
4. In the **Calibrate Circuit** window, in the **Current Prescriptions** list, tap the prescription you want to calibrate and then tap **Calibrate**.
5. Follow the instructions on the screen.
   — If any part of the test fails, correct the issue suggested on the screen and then tap **Retest** to continue the test.
   — To cancel the test, tap **Quit**.

6.3.1.2 Using Default Settings

If you want to stop using calibrated settings and return to the default settings, follow these steps:

1. In the menu bar, tap the **Options** icon.
2. In the **Options** window, tap **Calibration & Setup**.
3. In the **Calibration & Setup** window, tap **Circuit Calibration**.
4. In the **Calibrate Circuit** window, in the **Current Prescriptions** list, locate the prescription you want to calibrate and then tap **Set to Default Calibration**.
5. On the confirmation window, tap **Yes**.

6.3.2 Leak Test

A clinician may recommend that you perform a leak test.

Prerequisites:

- Be sure the prescription is for an active circuit type:
  — Active Flow
  — Active PAP
  — Dual Limb
- Remove the patient interface from the circuit.
- Block the end of the circuit where the patient interface would be.
- Be sure the external active exhalation valve is assembled and connected.

To perform a leak test, follow these steps.

1. In the menu bar, tap the **Options** icon.
2. In the **Options** window, tap **Calibration & Setup**.
3. In the **Calibration & Setup** window, tap **Leak Test**.
4. Review the prerequisites and then tap **Start**.
5. The system performs the test. The results appear in the test progress pane. If the test:
   — *Fails*: Review the failure reasons. If you want to try again, tap **Retest**; otherwise, tap **Quit**.
   — *Passes*: Tap **OK**.

6.3.3 FiO_2 Sensor Calibration

A clinician may direct you to calibrate the FiO_2 sensor.

Prerequisites:

- Be sure the patient circuit is connected.
- Remove the patient interface from the circuit.
- Remove any passive exhalation device.
- Be sure that low-flow O_2 is not connected.

To calibrate the FiO_2 sensor, follow these steps.

1. In the menu bar, tap the **Options** icon.
2. In the **Options** window, tap **Calibration & Setup**.
3. In the **Calibration & Setup** window, tap **O_2 Sensor Calibration**.
4. Review the prerequisites and then tap **Start**.
5. The system performs the Circuit Flush test. The results appear in the progress pane. If the test:
   — Fails: Review the failure reasons. If you want to try again, tap **Retest**; otherwise, tap **Quit**.
   — Passes: Go to the next step.
6. Block the end of the circuit and then tap **Continue**.
7. The system performs the 21% Calibration test. The results appear in the progress pane. If the test:
   — Fails: Review the failure reasons. If you want to try again, tap **Retest**; otherwise, tap **Quit**.
   — Passes: Go to the next step.

6.3.4 CO_2 Sensor Adapter Zero

A clinician may direct you to establish a baseline CO_2 level

To establish a baseline CO_2 level, follow these steps.

1. Place the CO_2 sensor onto a clean and dry airway adapter that is exposed to room air, but is away from all CO_2 sources including the ventilator, your breath, and the patient's breath.
2. In the menu bar, tap the **Options** icon.
3. In the **Options** window, tap **Calibration & Setup**.
4. In the **Calibration & Setup** window, tap **CO_2 Sensor Adapter Zero**.
5. Review the prerequisites and then tap **Start**.
6. The system performs the test. The results appear in the test progress pane. If the test:
   — Fails: Review the failure reasons. If you want to try again, tap **Retest**; otherwise, tap **Quit**.
   — Passes: tap **OK**.

6.4 Data Transfer

Use data transfer functions to import and export data. When working with personal health information, be sure the data is kept secure. When working with an external storage device that contains patient information, such as a USB flash drive, be sure you delete that data by reformatting the storage device.

The following data transfer icons appear in the Status Bar during transfer.

USB Data Transfer icon:

Bluetooth Data Transfer icon:

To access the data transfer functions, follow these steps.

1. In the menu bar, tap the **Options** icon.
2. In the **Options** window, tap **Data Transfer**.
3. In the **Data Transfer** window, tap the procedure you would like to perform and then follow the prompts on the screen:

<table>
<tr><th>Function</th><th>Description</th></tr>
<tr><td>Export Alarm & Event Log</td><td>Export the alarm and event logs. If two storage devices are connected, the logs are saved to the device that was connected first.</td></tr>
<tr><td>Export Data - USB</td><td>Export data to a storage device connected to the USB port. Data is identified by the device serial number.
<table>
<tr><th>Data type</th><th>Data stored</th></tr>
<tr><td>Changes to the ventilator, alarms, prescriptions, accessories and oxygen</td><td rowspan="2">6 months</td></tr>
<tr><td>30-second averages of each therapy parameter related to the therapy provided to the patient</td></tr>
<tr><td>Waveform data including pressure, flow, volume, and total leak</td><td rowspan="2">31 days</td></tr>
<tr><td>Patient monitors:
• CO_2 monitor data
• Oximeter data
• FiO_2 monitor data</td></tr>
</table></td></tr>
<tr><td>Export Data - Bluetooth</td><td>Export data to a storage device connected through Bluetooth. Data is identified by the device serial number.
<table>
<tr><th>Data type</th><th>Data stored</th></tr>
<tr><td>Changes to the ventilator, alarms, prescriptions, accessories and oxygen</td><td rowspan="2">6 months</td></tr>
<tr><td>30-second averages of each therapy parameter related to the therapy provided to the patient</td></tr>
<tr><td>Waveform data including pressure, flow, volume, and total leak</td><td rowspan="2">31 days</td></tr>
<tr><td>Patient monitors:
• CO_2 monitor data
• Oximeter data
• FiO_2 monitor data</td></tr>
</table></td></tr>
<tr><td>Install Prescriptions</td><td>Installs prescriptions that were previously exported.</td></tr>
<tr><td>Install Software Update</td><td>Be sure the version number that you are installing is higher than the current software version. After installing the update, the system automatically restarts.</td></tr>
</table>

6.5 Information

The information window shows general information about the device, including the following:

- Model Number
- Serial Number
- Software Version Number
- Hardware Version Number
- Internal Battery Serial Number
- Detachable Battery Serial Number
- Operational Hours – Total Blower Hours
- Operational Hours – Total Patient Hours
- Software licenses
- Photography credits

To change pages, tap the page icons at the bottom of the window. To view software licenses and photography credits, tap the item you want to view.

6.6 Alarm and Event Log

The Alarm and Event Log is a record of events related to the device and to therapy. The log shows the event, when it occurred, and a brief description. Information is saved even when you shut off the device or when power is lost. The log stores the most recent 6-months of information with the exception of the event log, which stores the most recent 10,000 records. Older records are overwritten.

To access the Alarm and Event Log:

1. In the menu bar, tap the **Options** icon.
2. In the **Options** window, tap **Alarm & Event Log**.

6.6.1 Parts of the Alarm and Event Log

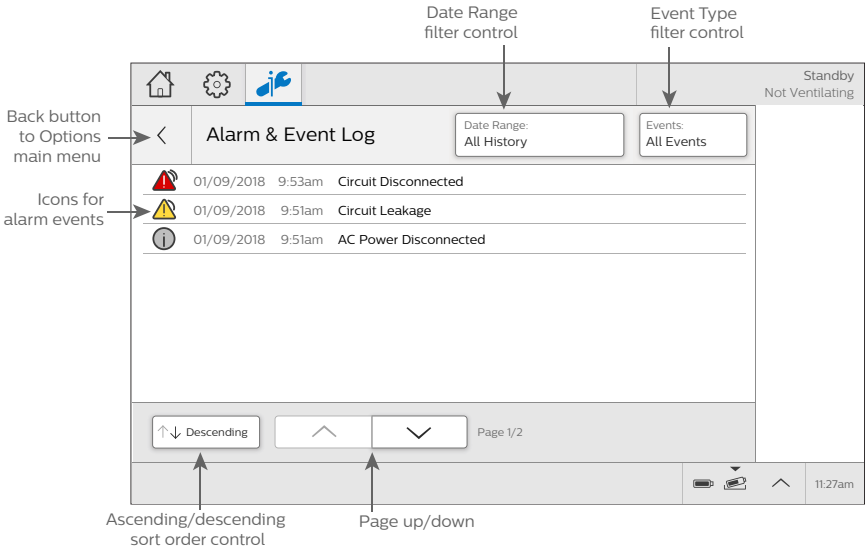

Prescription Preferences

The Prescription Preferences window contains a list of all prescriptions. All functions are available when the device is in standby.

Use this window to change a prescription's background image.

To access the **Prescription Preferences** window:

1. In the menu bar, tap the **Options** icon.
2. In the **Options** window, tap **Prescription Preferences**.

6.6.2 Changing the Background Image

To change the background image associated with a prescription:

1. In the **Prescription Preferences** window, tap the edit button next to the image you want to change.
2. On the **Image Selection** dialog box, tap an image and then tap the **Accept** checkmark.

7. Cleaning and Disinfection

7.1 Overview

Warnings:

- Because Trilogy Evo is intended for multi-patient use, be sure you follow the cleaning and disinfection instructions in this chapter.
- Be certain that any bacterial filter used with this device complies with ISO 23328-1 and ISO 23328-2. To prevent patient or ventilator contamination, you must use a Philips Respironics-approved main flow bacterial filter on the patient gas outlet port. Filters not approved by Philips Respironics may degrade system performance. For a list of accessories, see the Trilogy Evo accessories guide.

7.2 Exterior Cleaning and Disinfection

Warning: To avoid electric shock, do not remove the enclosure cover. Only service personnel should remove the enclosure. After cleaning and disinfecting, be sure the device is completely dry before reattaching accessories and connectors and before reconnecting it to a power source. To avoid electrical shock, always unplug the power cord from the wall outlet before cleaning the ventilator. If the device has been exposed to rain or dampness, dry the device (including the area around the power cord connection) with the power cord disconnected from the device before applying AC power.

Caution: Do not immerse the device or allow liquids into any of the controls or inside the enclosure as the device may be damaged. If this occurs, contact your equipment provider for assistance. Use only the cleaning agents and methods described in this section to clean and disinfect the device.

7.2.1 Cleaning the Exterior

Frequency: Clean Trilogy Evo's exterior surface weekly and between patients.

Requirements:

- Lint-free cloth
- Soft-bristle brush
- Liquid dishwashing detergent solution:
  1 teaspoon of liquid dishwashing detergent (such as Dawn Ultra Dishwashing Liquid®) per gallon of warm water

To clean the exterior, follow these steps.

1. Turn the device off and disconnect it from the power source.
2. Detach all accessories and connectors.
3. Use a lint-free cloth dampened (not dripping) with a liquid dishwashing detergent solution to clean the exterior of the enclosure.

4. Use a soft-bristle brush in the areas around the screen, buttons, and any other areas where soil may be difficult to remove. Ensure you remove all visible soil.
5. Use a lint-free cloth dampened (not dripping) with clear water to remove all detergent residue.
6. Use a lint-free cloth to dry the enclosure.
7. Inspect the device for cleanliness.
8. Repeat the cleaning steps until the surfaces are visibly clean.
9. Inspect the device for damage after cleaning. If any parts are damaged, contact customer service.

7.2.2 Disinfecting the Exterior

Frequency: Disinfect the exterior surface weekly and between patients.

Prerequisite: Before disinfecting the exterior, be sure you have cleaned the device as instructed in the previous section, “Cleaning the Exterior” on page 64.

7.2.2.1 Isopropyl Alcohol

Requirement: 70% isopropyl alcohol, lint-free cloth

To disinfect with alcohol, follow these steps.

1. Use a lint-free cloth dampened with alcohol to wipe the alcohol onto the exterior, thoroughly wetting the surfaces.
2. Keep wet 10 minutes.
3. Allow to air dry.

7.2.2.2 Chlorine Bleach

Requirement: Household chlorine bleach containing 8.25% sodium hypochlorite, lint-free cloth

To disinfect with bleach, follow these steps.

1. Combine 10 parts water to 1-part bleach.
2. Use a lint-free cloth dampened with the bleach solution to wipe the bleach solution onto the exterior, thoroughly wetting the surfaces.
3. Keep wet 10 minutes.
4. Allow to air dry.

7.3 Cleaning the Detachable Battery

Frequency: Clean the detachable battery monthly.

Requirements:

- Lint-free cloth
- Soft-bristle brush
- Liquid dishwashing detergent solution:
  1 teaspoon of liquid dishwashing detergent (such as Dawn Ultra Dishwashing Liquid) per gallon of warm water

To clean the detachable battery:

1. Remove the detachable battery.
   Open the detachable battery access door. Lift the battery handle and pull the battery to remove it from the battery bay.

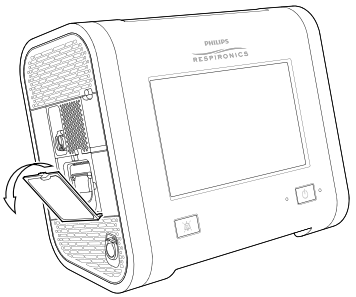

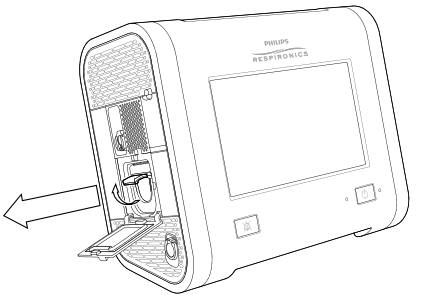

2. Use a lint-free cloth dampened (not dripping) with a liquid dishwashing detergent solution to wipe the battery. Ensure you remove all visible soil.
3. Use a dry, soft-bristle brush to clean any small areas, such as crevices or small openings that are not accessible with the cloth.
4. Use a lint-free cloth dampened (not dripping) with clear water to remove all detergent residue.
5. Allow the battery to air dry completely.
6. Inspect the battery for damage after cleaning. If any part is damaged, contact Philips Respironics Customer Service.
7. Replace the battery. Open the detachable battery access door. Slide the battery into the bay until you hear a click.

7.4 Rinsing the Air-Inlet Foam Filter

The air-inlet foam filter is the gray foam located on the back panel. It protects Trilogy Evo from dirt and dust. This filter is for single patient use. Only use Philips Respironics-supplied filters. Ventilation can continue while you are replacing the filter.

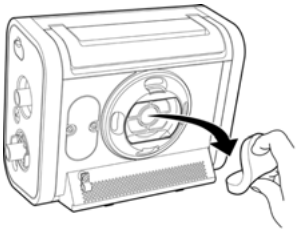

Frequency: In the home environment, rinse monthly and replace every six months.

Requirements: Replacement filter, water

To rinse the disposable inlet filter:

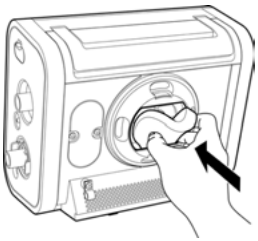

1. Ensure you have a replacement filter nearby.
2. Pinch the filter and pull it out of the filter cover.
3. Insert the clean replacement filter into the filter cover. Ensure it is positioned securely.
4. Visually inspect the filter you just removed from the device.
5. If it is damaged, discard it according to your local regulations. Otherwise, proceed to the next step.
6. Rinse the dirty filter in clear water. Inspect the filter for cleanliness and repeat previous step until the filter is clean.
7. Allow the filter to air dry completely before reinstalling it.

8. Service and Maintenance

8.1 Overview

Sections in this chapter:

- “Service” on page 68
- “Disposal” on page 68
- “Replacing the Air-Inlet Foam Filter” on page 69
- “Replacing the Particulate Filter” on page 69

8.2 Service

Repairs and maintenance must be performed by service personnel only. Unauthorized repairs and adjustments could cause death or injury, invalidate the warranty, or result in costly device damage.

The device should be sent for preventative maintenance every four years. Trilogy Evo’s expected service life is 10 years.

8.3 Disposal

Dispose according to local regulations. If you need help, contact customer service.

8.4 Daily Maintenance

Conduct the following maintenance every day.

- Visually inspect accessories for damage or signs of wear. Discontinue use and replace if damaged.
- When using the FiO_2 sensor, to maintain accuracy, calibrate the FiO_2 sensor daily. See “FiO2 Sensor Calibration” on page 59.

8.5 Replacing the Air-Inlet Foam Filter

The air-inlet foam filter is the gray foam located on the back panel. It protects Trilogy Evo from dirt and dust.

In the home environment, replace every six months. Only use Philips Respironics-supplied filters. Dispose according to local regulations. Ventilation can continue while you are replacing the filter.

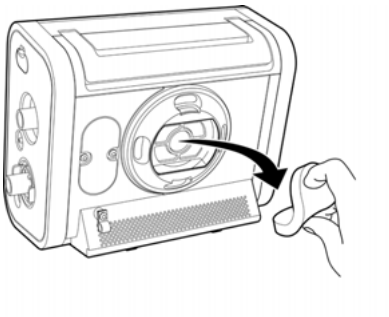

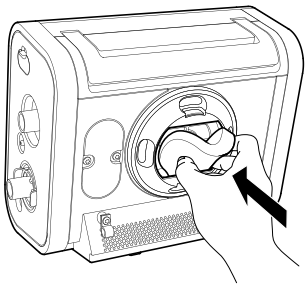

To replace the disposable inlet filter:

1. Be sure you have a replacement filter nearby.
2. Pinch the filter and pull it out of the filter cover.
3. Insert the clean replacement filter into the filter cover. Be sure it is positioned securely.

8.6 Replacing the Particulate Filter

The particulate filter is an optional filter that protects Trilogy Evo from dirt and dust. Replace the particulate filter monthly. Ventilation can continue while you replace the filter.

Twist the filter cover counterclockwise a quarter of a turn, and then pull straight out to remove.

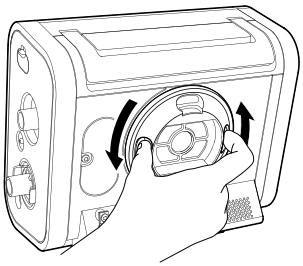

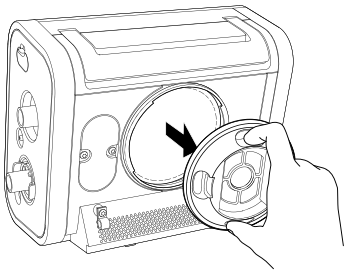

Twist the filter counterclockwise a quarter of a turn, and then pull straight out to remove.

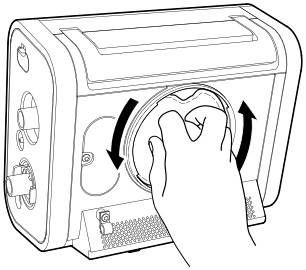

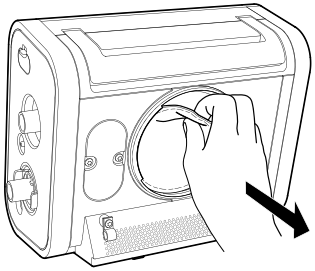

Place a new filter onto the bayonet mount then twist the filter clockwise a quarter of a turn while pressing in to secure.

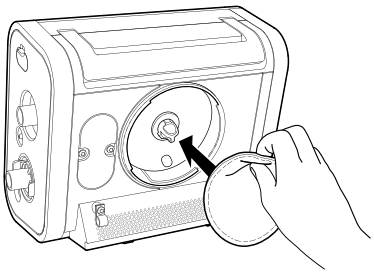

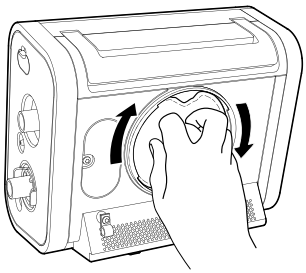

Replace the filter cover and turn clockwise to secure.

9. Accessories

9.1 Overview

To prevent adverse performance, use Trilogy Evo only with accessories intended for use with this device, including circuits, patient monitors and power accessories. For a list of accessories, see the Trilogy Evo accessories guide at:
https://www.usa.philips.com/healthcare/product/HCDS2110X11B/trilogyevo.

You must be sure accessories and parts are compatible before you connect a patient to the device.

9.2 Portability and Travel Accessories

Use the travel bag to transport the device when not in use. Do not operate the ventilator when it is inside the travel bag.

The in-use case can protect Trilogy Evo during device operation.

When using mobility accessories such as the wheelchair mount or roll stand, confirm that the ventilator is adequately secured. See the accessory's instructions for use.

9.3 Power Accessories

For instructions, see "Power Management" on page 75.

9.4 Patient Circuits and Circuit Accessories

For instructions on attaching circuits to the ventilator, see "Device Setup" on page 20. For information about the circuit you are using, see the accessory's instructions for use. For a list of compatible circuits and circuit accessories, see the Trilogy Evo accessories guide at:

https://www.usa.philips.com/healthcare/product/HCDS2110X11B/trilogyevo.

9.4.1 Humidification Accessories

For humidification accessories, see the accessory's instructions for use.

9.4.2 Exhalation Accessories

For exhalation accessories, see the accessory's instructions for use.

9.4.3 Flow Sensors

For flow sensors, see the accessory's instructions for use.

9.4.4 Circuit Filters

For circuit filters, see the filter's instructions for use.

9.5 Monitors and Sensors

9.5.1 External Pulse Oximeter and Sensors

Attach the external pulse oximeter to either USB port on the ventilator. Attach a sensor to the pulse oximeter. Follow the instructions provided with the sensor.

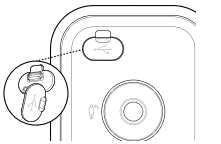

When you connect the external pulse oximeter, the monitored parameters pane will show the SpO_2 and pulse rate values during standby and while delivering therapy.

9.5.2 Capnography

Capnography requires the Mainstream CO_2 sensor, a compatible airway adapter, and a USB to CO_2 monitor adapter cable. For information, see the instructions that accompany each of these accessories.

To connect the CO_2 sensor:

1. Connect the CO_2 sensor to the adapter cable.
2. Plug the adapter cable into one of Trilogy Evo's USB ports.
3. Connect the airway adapter to the sensor. See the sensor instructions.
4. Install the sensor at the proximal end of the circuit. See the sensor instructions.
5. Allow two minutes for the sensor to begin providing data in the Monitored Parameters Pane.
6. Perform an "adapter zero" to establish a baseline CO_2 level. See "CO_2 Sensor Adapter Zero" on page 60. Perform an "adapter zero" if you switch from one type of airway adapter to another or when indicated by the system alarm.

9.6 Filters

9.6.1 Air-Inlet Foam Filter

The air-inlet foam filter protects Trilogy Evo from dirt and dust. This filter is for single patient use. For instructions on rinsing the filter, see "Cleaning and Disinfection" on page 64. For instructions on replacing the filter, see"Service and Maintenance" on page 68.

9.6.2 Particulate Filter

The particulate filter is an optional filter that protects Trilogy Evo from dirt and dust. This filter is for single patient use. For instructions on replacing the filter, see “Service and Maintenance” on page 68.

9.7 Oxygen

To connect low flow oxygen, see “Low Flow Oxygen” on page 25.

9.8 Communications Cables

To connect a communications cable, use either of the USB ports. For more information, see the cable’s instructions for use.

9.9 Remote Alarm

You can use a Philips Respironics remote alarm or institutional nurse call system with your device. Use the remote alarm or nurse call connector (RJ9) on the Utility panel to connect a remote alarm or nurse call system. The remote alarm or nurse call system should be visible and audible to the caregiver at all times. See the remote alarm or cable’s instructions for further information. For a list of accessories, see the Trilogy Evo accessories guide.

If you are using a remote alarm or nurse call system, fully test the system before starting ventilation.

- Verify that you can hear the ventilator’s audible alarms on the remote alarm or nurse call system.
- If using a remote alarm, be sure the remote alarm signals when you disconnect the remote alarm cable from the ventilator or the remote alarm. To use the alarm and for further testing instructions, see the remote alarm’s instructions.
- If using a normally closed nurse call system, be sure the nurse call system signals when you disconnect the nurse call cable from the ventilator or the nurse call system. Philips Respironics strongly recommends that you use a normally closed nurse call system.

Warnings:

- Do not rely solely on the audible indicator provided by a remote alarm or nurse call system as the primary indicator of the operating state of the device or of patient events. Use of a remote alarm or nurse call system should be considered a backup to the ventilator’s primary alarm system. The remote alarm or nurse call system is for use only in a medically supervised environment.
- If you are using a nurse call system, Philips Respironics strongly recommends that you use a normally closed nurse call system. Only a normally closed system will alarm if the nurse call cable becomes disconnected. A normally open system will not alarm.
- Be sure that the nurse call systems used do not exceed 42.4VAC peak or 60VDC under normal operating conditions.

9.10 USB Flash Drive

The USB flash drive (removable storage) included with your device can be used to import and export data. See “Data Transfer” on page 60. It also contains training software. To view the training materials, insert the drive into the USB port on personal computer and open either the HTML file or the PDF.

10. Power Management

10.1 Overview

Trilogy Evo can operate on AC (wall outlet) or DC (battery) power from several sources. Sources are listed in descending priority below.

1. AC Power, see “AC Power” below.
2. External battery (DC) such as a vehicle battery – requires an external battery cable, see “External Battery” below.
3. Detachable battery (DC), see “Detachable Battery” on page 76.
4. Internal battery (DC), see “Internal Battery” on page 77

10.2 AC Power

AC power has the highest priority. When AC power is present, the device uses that power to run the device and to charge the detachable and internal batteries.

To use AC power, follow these steps.

1. Plug the socket end of the AC power cord into the power inlet on the device.
2. Attach the retention clip to the cord and screw the clip into the back panel of the device.
3. Plug the pronged end of the power cord into an electrical outlet that is not controlled by a wall switch.
4. Verify the device is using AC power. You should see the green LED light next to the power button appear. If you do not see this light, contact customer service.
5. Periodically inspect the power cord for damage or signs of wear. Discontinue use and replace if damaged.

To remove AC power, disconnect the AC power cord from the electrical outlet.

10.3 External Battery

You can use an external DC power source, such as a vehicle battery, to power the device. The external battery can charge the internal and detachable batteries. You must use a compatible battery cable to connect the battery to the device. Do not use any other cable or improper operation of the device may occur. For a list of accessories, see the Trilogy Evo accessories guide at: https://www.usa.philips.com/healthcare/product/HCDS2110X11B/trilogyevo.

For complete instructions, see the battery cable’s accompanying documents. The external battery will power the device when it is disconnected from AC power.

Verify that the external battery is set up correctly. You should see the external battery icon appear in the Battery Power Meter on the Status Bar.

10.4 Detachable Battery

The detachable battery can power the device when disconnected from AC or external battery power. Use only the Philips Respironics Trilogy Evo-series Detachable Battery Pack.

Battery operating time depends on device usage. The operating time shown on the device is only an estimate of the actual remaining power.

The battery includes an LED charge meter. To view the percentage of charge, remove the battery and press the button on the battery. Green lights appear to indicate how much charge remains in the battery.

To remove the detachable battery: open the detachable battery access door. Lift the battery handle and pull the battery to remove it from the battery bay.

To replace the detachable battery: open the detachable battery access door. Slide the battery into the battery bay until you hear a click.

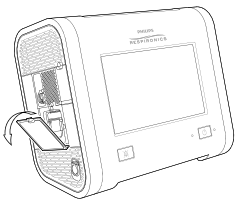

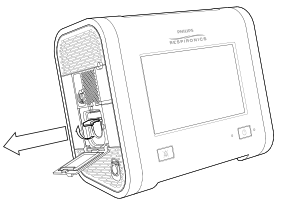

Verify the detachable battery is installed correctly. You should see the detachable battery icon appear in the Battery Power Meter on the Status Bar.

10.4.1 Warnings

- Do not disassemble or open, drop, crush, bend or deform, puncture, or shred the detachable battery pack.
- If the detachable battery is dropped or mishandled, discontinue use of the battery and contact Philips Respironics Customer Service.
- Do not modify or remanufacture, attempt to insert foreign objects into the battery, immerse or expose the battery to water or other liquids, or expose the battery to fire, excessive heat, or put the battery in a microwave oven.
- Only use the battery for the systems for which it is specified.
- Only use the battery with a charging system specified by the manufacturer/supplier.
- Do not allow metallic or conductive objects to contact battery terminals, which may result in a short-circuit.
- Replace the battery only with another battery specified by the manufacturer. Use of an unqualified battery may present a risk of fire, explosion, leakage, or other hazard.

- Improper battery use may result in a fire, explosion, or other hazard.
- Battery use by children should be supervised.

10.4.2 Cautions

- Do not expose the battery to temperatures outside of the specifications. This may increase the risk of fire or damage the battery.
- Do not leave the battery in a fully discharged state for an extended time.
- The service life of the detachable battery will decrease depending on the battery age, the number of charge-discharge cycles, and operation or storage at higher temperatures.
- As with most rechargeable lithium-ion batteries, exposing the battery to elevated temperatures for extended times reduces the amount of power that battery can store. For example, a battery may be stored for up to a year at 25° C without experiencing a significant impact to the amount of power that it can store. After being stored for a year at 60° C, that same battery may lose as much as 30% of the power it can store.

10.4.3 Detachable Battery Specifications

Voltage:	14.4 to 14.8 VDC
Rated capacity:	80 Wh minimum
Chemistry type:	Lithium-Ion
Charge operating temperature:	0° C to 45° C
Storage temperature:	-20° C to 60° C
Relative humidity (operating and storage):	5 to 93% (non-condensing)

10.5 Internal Battery

Internal battery power is the lowest priority power source.

The internal battery appears in the Battery Power Meter on the Status Bar. For help, see “Battery Status” on page 78.

10.6 Battery Status

The battery power meter appears in the status bar at the bottom of the window. The meter shows the battery status. The In-use Arrow points to the battery in use (if any).

Battery Power Meter in the Status Bar

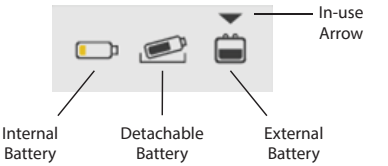

Battery operating time depends on the characteristics of the battery and usage of the device. The capacity of the battery shown on the Battery Power Meter is only an estimate.

During active therapy, tap the power meter to view more details.

- Estimated battery time remaining (for the internal and detachable batteries)
- Estimated remaining battery power shown as a percent of total capacity (for the external battery)

You can also view battery status in the Monitoring Window: see “Monitoring Window” on page 18.

For a list of power icons, see “Power Icons” on page 79.

10.7 Power Loss

Several alarms are related to power and power loss. For help on these alarms and test procedures, see “Alarms and System Messages” on page 29.

If all power sources are lost during active therapy, as soon as a power source is connected, the device will begin to deliver therapy again. All alarm settings are retained and restored.

10.8 Power Icons

The following is a list of power icons that appear in the status bar.

Note: The charge icon appears on top of the power icon when the internal or detachable battery is charging.

Estimated capacity	Internal Battery	Detachable Battery	External Battery
81-100% capacity			
61-80% capacity			
41-60% capacity			
21-40% capacity			
1-20% capacity			
Low power remaining			
Nearly depleted			
0% capacity or failed			

11. Connectivity

11.1 Overview

You can connect this device to external systems through USB or wireless connections.

11.2 Wireless

This device has Bluetooth SmartReady wireless technology, which includes Bluetooth Classic and Bluetooth Low Energy. Bluetooth allows Trilogy Evo to communicate with a compatible Bluetooth device approved by Philips Respironics. Bluetooth functionality may not be present in all models.

Warning: The Health Industry Manufacturers Association recommends that a minimum separation of six inches be maintained between a wireless phone and a pacemaker to avoid potential interference with the pacemaker. The Trilogy Evo on-board Bluetooth communication should be considered a wireless phone in this regard.

Caution: When traveling by air, inform the airline of the presence of wireless technology in this device. Ensure such devices are permitted.

QoS: Wireless Quality of Service (QoS) refers to the necessary level of service and performance needed for the wireless functions of the device. It involves parameters such as reliability of data transmission, effective transfer rate, error rate, and mechanisms to define priority levels for time-critical signals.

Bluetooth QoS: Bluetooth uses frequency hopping, channel coding, and error correction to address interference and is designed to operate with other devices that occupy the same spectrum. In addition to the measures defined in the Bluetooth standard, the Trilogy Evo radio incorporates other methods to minimize the likelihood of QoS problems. These include:

- Data sent between the ventilator and any external devices uses additional checksum verification to ensure that data is correctly received without errors.
- The ventilator is a portable device and will not always be near the external gateway device when the ventilator is ready to transfer data. The system is designed to take this into account. The system can tolerate latency and will keep retrying if something occurs that prevents successful data transfer. This retry mechanism happens automatically and requires no intervention by the user. The external Bluetooth gateway device attempts to reconnect once per minute until it successfully connects and the data transfer is complete.

If Bluetooth communication issues are encountered, check to see if other nearby devices are operating in the immediate vicinity at the same 2.4 GHz frequency as the ventilator Bluetooth radio. These devices include:

- Other Bluetooth devices
- Wi-Fi devices
- Microwave ovens

Portable and mobile RF communications equipment should be used no closer to any part of the device, including cables, than the recommended 30 cm separation distance.

11.3 Connectivity Actions

To access the Bluetooth window:

1. In the menu bar, tap the **Options** icon.
2. In the **Options** window, tap **Device Options**.
3. In the **Device Options** window, tap **Bluetooth**.

To enable Bluetooth connections, In the **Bluetooth** window, tap **On**.

To view connection status, the Bluetooth window contains a connection status indicator, including the MAC address of the current or most recently connected device.

12. Technical Data

12.1 Overview

This chapter contains technical data and specifications.

Sections in this chapter:

- “Specifications” on page 82
- “Pneumatic Diagram” on page 88

12.2 Specifications

12.2.1 Ventilation types and modes

- A/C-PC: Assisted control (pressure control)
- A/C-VC: Assisted control (volume control)
- CPAP: Continuous positive airway pressure
- PSV: Pressure support ventilation
- S/T: Spontaneous/timed ventilation
- SIMV-PC: Synchronized intermittent mandatory ventilation (pressure control)
- SIMV-VC: Synchronized intermittent mandatory ventilation (volume control)
- AVAPS-AE

12.2.2 Controls

AVAPS with passive circuit	PSV, S/T, and A/C-PC modes only
Tidal volume	35 – 2000 ml
Breath rate	0 – 80 BPM
PEEP	0 – 35 cm H_2O for active exhaust circuits 3 – 25 cm H_2O for passive circuits
EPAP/CPAP	3 – 25 cm H_2O
IPAP	3 – 60 cm H_2O
Pressure support/pressure control	0 – 60 cm H_2O, patient pressure limited to 60 cm H_2O
Inspiratory time	0.3 – 5.0s, constrained to prohibit an inverse I:E ratio
Rise time	0, 1, 2, 3, 4, 5, 6
Triggering and cycling	Off, Auto-Trak, Sensitive Auto-Trak, and Flow Trigger
Flow trigger sensitivity	0.5 – 9 L/min
Flow cycle sensitivity	10% – 90% of peak flow
Flow pattern	Square, Ramp
FiO_2	21% – 100%

Inspiratory time min/max	0.3 - 3.0 sec
Backup ventilation	On - Off

12.2.3 Measured and Displayed Patient Parameters

Tidal volume (Vti or Vte)	0 to 2000 ml in increments of 1 ml
Minute ventilation (MinVent)	0 to 30 L/min in increments of 0.1 L/min
Leak	0 to 200 L/min in increments of 0.1 L/min
Respiratory rate (RR)	0 to 90 BPM in increments of 1 BPM
Peak inspiratory flow (PIF)	0 to 200 L/min in increments of 0.1 L/min
Peak inspiratory pressure (PIP)	0 to 90 cm H_2O in increments of 0.1 cm H_2O
Mean airway pressure	0 to 90 cm H_2O in increments of 0.1 cm H_2O
Percentage spontaneous triggered breaths (%Spont Trig)	0 to 100% in increments of 1%
I:E ratio	9.9:1 to 1:9.9
Dynamic compliance (Dyn C)	1 to 100 ml/cm H_2O in increments of 1 ml/cm H_2O
Dynamic resistance (Dyn R)	5 to 200 cm H_2O/l/sec in increments of 1 cm H_2O/l/sec
Dynamic plateau pressure (Dyn Pplat)	0 to 90 cm H_2O in increments of 1 cm H_2O
Auto-PEEP	0 to 20 cm H_2O in increments of 1 cm H_2O
FiO_2 with FiO_2 sensor	21% to 100% in increments of 1%
SpO_2 with pulse oximeter accessory	0 to 100% in increments of 1%
Pulse rate with pulse oximeter accessory	18 to 321 beats per minute in increments of 1 beat per minute See “Pulse Oximeter.”
$EtCO_2$ with CO_2 accessory	0 to 150 mmHg in increments of 1 mmHg See “EtCO2 (with Mainstream CO_2 sensor).”

12.2.4 Environmental

Operating	• Temperature: 0° C to 40° C, 32° F to 104° F • Relative humidity: 5% to 90% RH, non-condensing • Atmospheric pressure: 62 to 106 kPa • Altitude: approximately -384 m to 3954 m (-1,261 to 12,971 ft) • Battery charging temperature: 5° C to 40° C, 32° F to 104° F
Transient operating temperature, excluding high pressure oxygen blending	-20° C to 50° C, -4° F to 122° F
Storage	• Temperature: -25° C to 70° C, -13° F to 158° F • Relative humidity: 5% to 93% RH, non-condensing

12.2.5 Physical

Weight	6.3 Kg (13.8 lbs) with oxygen blender 5.8 Kg (12.7 lbs) without oxygen blender
Size With oxygen blender Without oxygen blender	 • 19.3cm D x 28.6 cm W x 24.5 cm H • 7.6” D x 11.25” W x 9.65” H • 16.5 cm D x 28.6 cm W x 24.5 cm H • 6.48” D x 11.25” W x 9.65” H
Screen dimensions	20.32 cm (8”)
Ingress protection	IP22: protection against finger-sized objects and protected against dripping water when tilted up to 15 degrees.
IEC 60601-1 classification	Type of protection against electric shock: Class II equipment Degree of protection against electric shock – type BF applied part
Composition	This device does not contain natural latex rubber or dry natural rubber.
Expected service life	10 years
Internal memory capacity	2 Gb
Mode of operation	Continuous
Maximum limited pressure	90 cm H_2O
Applied parts	• Pulse oximeter • Breathing circuit • Components added to the breathing circuit including: flow sensor, flow sensor cable, and CO_2 accessory and cable

12.2.6 Electrical

AC input voltage	100V – 240V, 50/60 Hz, 1.7-0.6 A
DC input voltage	12/24V 6.5A
Internal and detachable Li-ion batteries	15 hours' nominal total run time per method in IEC 80601-2-72 (7.5 hours each battery) Charge time for detachable and internal battery: • From 0% to 80%: 2.5 hours • From 0% to 100%: 3.5 hours
Degree of protection against electric shock	Type BF applied part

12.2.7 Audio

12.2.8 Oxygen

Low flow	0 to 30 L/min; maximum 10 psi (dry oxygen)
High pressure	280 to 600 kPa (41 to 87 psi) (dry oxygen)
Ventilator response to a 21 -90% increase in oxygen concentration	< 30 seconds

12.2.9 Control Accuracy

For mouthpiece ventilation, pressure and tidal volume are specified at the device outlet.

Pressure	± (2 cm H_2O + 4% of the setting)
Tidal volume	± (4 ml + 15% of setting)
FiO_2	± 5 % FiO_2

12.2.10 Monitored Parameter Accuracy

Airway pressure	± (2 cm H_2O + 4% of actual)
Tidal volume	± (4 ml + 15% of actual) for volumes ≥ 35 ml ± 10 ml for volumes < 35 ml
FiO_2	± (2.5% FiO_2 + 2.5% of actual reading) within a 24-hour sensor calibration period, or a change in altitude Measurement is not automatically compensated for changes in altitude. Response time: < 11 seconds
$EtCO_2$	See “EtCO2 (with Mainstream CO2 sensor)” on page 87.
SpO_2 and pulse rate	See “Pulse Oximeter” on page 87.

12.2.11 Wireless

Bluetooth	
Operating frequency range	2402-2480 MHz
Channel bandwidth	1 MHz/2 MHz
Maximum output power	15.6 dBm
Modulation	GFSK, Pi/4 DQPSK, 8DQPSK
Range	20 m (66 ft)
Near-field communication (NFC)	
Operating frequency	13.56 MHz
Receiving section bandwidth	1.4 MHz
Maximum output power	58.3 dBuV/m@3m
Modulation	ASK, OOK
Range	2 cm (1 in)
Wi-Fi	
Operating frequency range	2412-2472 MHz
Channel bandwidth	20 MHz/40 MHz
Maximum output power	19.6 dBm
Modulation	DSSS, OFDM, DBPSK, DQPSK, CCK, 16-QAM
Security	WPA2
Range	30m (98 ft)

12.2.12 $EtCO_2$ (with Mainstream CO_2 sensor)

Displayed $EtCO_2$	• Upon connection, allow up to two minutes for data to appear. • Displayed value is the peak of the expired CO_2 waveform, updated on each breath. • Displayed $EtCO_2$ waveform sample rate is 10 Hz. • Measurement automatically compensates for changes in altitude. • Accuracy is not impacted by the respiration rate. • If breathing is not detected, then no value appears.	
Accuracy	0 - 40 mmHg:	± 3 mmHg
	41 - 70 mmHg:	± 5% of reading
	71 - 100 mmHg:	± 8% of reading
	101 - 150 mmHg:	± 10% of reading
Stability	Short Term Drift: Drift over four hours shall not exceed 0.8 mmHg maximum. Long Term Drift: Accuracy specification will be maintained over a 120-hour period.	
Total system response time	<2 seconds	

12.2.13 Pulse Oximeter

Displayed Oxygen Saturation Range (SpO_2):	0 to 100% with a resolution of 1%
Displayed pulse rate range:	18 to 321 beats per minute with a resolution of 1
SpO_2 and pulse rate accuracy:	See the sensor instructions.
Data update period:	Every second
Data averaging:	4 beat average, updated every second

All flows and volumes are expressed in BTPS.
Measurement uncertainty for control and performance specifications
The stated tolerances account for the measurement uncertainty of the test equipment used to verify performance:

- Pressure: ± 0.75% cm H_2O
- Tidal Volume: ±2 ml
- Oxygen: ±1% FiO_2

12.3 Pneumatic Diagram

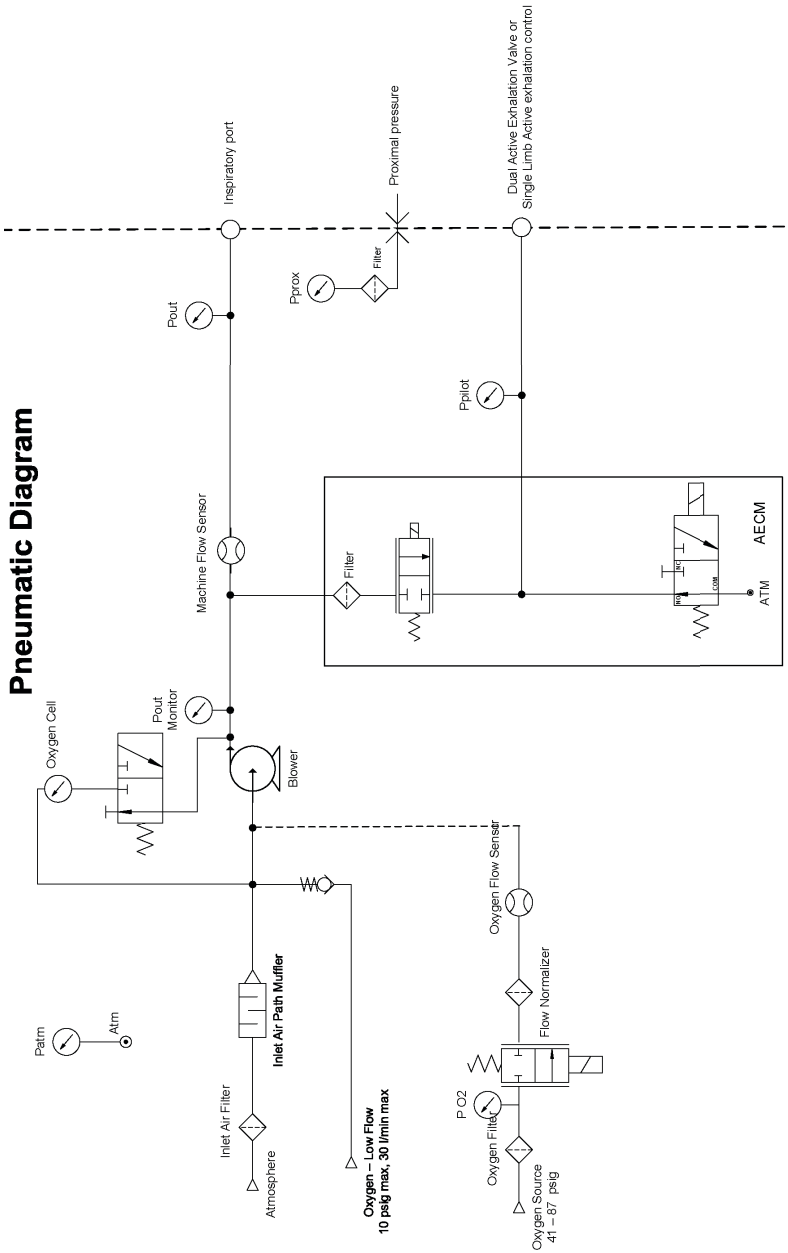

13. Regulatory Information

13.1 Standards Compliance

This device conforms to the following standards:

13.1.1 General

IEC 60601-1-1 Medical electrical equipment. Part 1-1: General requirements for safety. Collateral standard: Safety requirements for medical electrical systems

13.1.2 Collateral

IEC 60601-1-2 Medical electrical equipment. Part 1-2: General requirements for basic safety and essential performance. Collateral Standard: Electromagnetic disturbances. Requirements and tests

IEC 60601-1-11 Home Health Care Environment according to transit-operable usage

13.1.3 Particular

Device essential performance is specified in each of the following standards:

- ISO 80601-2-12: Medical electrical equipment. Part 2-12: Particular requirements for basic safety and essential performance of critical care ventilators
- ISO 80601-2-55 Medical electrical equipment. Part 2-55: Particular requirements for the basic safety and essential performance of respiratory gas monitors
- ISO 80601-2-61 Medical electrical equipment. Part 2-61: Particular requirements for basic safety and essential performance of pulse oximeter equipment
- ISO 80601-2-72 Medical electrical equipment. Part 2-72: Particular requirements for basic safety and essential performance of home healthcare environment ventilators for ventilator-dependent patients

13.1.4 Wireless communication

- Bluetooth Core Specification version 4.1
- ISO/IEC 18092:2013: Information technology. Telecommunications and information exchange between systems. Near Field Communication. Interface and Protocol (NFCIP-1)
- ISO IEC 21481 ed 2.0: Information technology. Telecommunications and information exchange between systems. Near Field Communication Interface and Protocol -2 (NFCIP-2)
- ISO/IEC 14443 ed 2.0: Identification cards. Contactless integrated circuit cards. Proximity cards.
- WLAN Standard: IEEE 802.11 (2012) b/g/n: Information technology. Telecommunications and information exchange between systems. Local and metropolitan area networks. Specific requirements. Part 11: Wireless LAN Medium Access Control (MAC) and Physical Layer (PHY) Specifications

13.2 EMC Information

This ventilator generates audible and visual alarms to alert you if it is not able to provide ventilation or if external monitoring is lost during an EMC disturbance.

Warnings:

- Avoid using this equipment adjacent to or stacked with other equipment because it could result in improper operation. Although the other equipment may comply with EMC standard requirements, interference can occur. If such use is necessary, observe this equipment and the other equipment to verify that both are operating normally.
- This device shall not be used near active high frequency (HF) surgical equipment, medical devices such as X-ray devices and diathermy, or in an RF shielded room of medical equipment or system for magnetic resonance imaging, where the intensity of electromagnetic (EM) disturbances is high.
- This device shall not be used near RFID or electromagnetic security systems.
- The use of accessories, transducers and/or cables other than those specified, with the exception of those sold by the manufacturer as replacement parts for internal components, may result in increased emissions or decreased immunity of the equipment or system.

13.2.1 Guidance and Manufacturer's Declaration - Electromagnetic Emissions

This device is intended for use in the electromagnetic environment specified below. The user of this device should make sure it is used in such an environment.

Emissions Test	Compliance	Electromagnetic Environment - Guidance
RF emissions CISPR 11 Industrial, scientific and medical equipment. Radio-frequency disturbance characteristics. Limits and methods of measurement	Group 1	The device uses RF energy only for its internal function. Therefore, its RF emissions are very low and are not likely to cause any interference in nearby electronic equipment.
RF emissions CISPR 11	Class B	The device is suitable for use in all establishments, including domestic establishments and those directly connected to the public low-voltage power supply network.
Harmonic emissions IEC 61000-3-2 Electromagnetic compatibility (EMC). Part 3-2: Limits. Limits for harmonic current emissions (equipment input current smaller than or equal to 16 A per phase)	Class A	
Voltage fluctuations/Flicker emissions IEC 61000-3-3 Electromagnetic compatibility (EMC) - Part 3-3: Limits - Limitation of voltage changes, voltage fluctuations and flicker in public low-voltage supply systems, for equipment with rated current ≤ 16 A per phase and not subject to conditional connection	Complies	
Emission of Radio Frequency Energy RTCA/DO-160G Section 21	Category M	This device is suitable for use on board commercial airplanes inside passenger cabin.

13.2.2 Guidance and Manufacturer's Declaration - Electromagnetic Immunity

This device is intended for use in the electromagnetic environment specified below. The user of this device should make sure it is used in such an environment.

Immunity Test	IEC 60601 Test Level	Compliance Level	Electromagnetic Environment - Guidance
IEC 61000-4-2 Electromagnetic compatibility (EMC). Part 4-2: Testing and measurement techniques. Electrostatic discharge immunity test	±8 kV contact ±2 kV, ±4 kV, ±8 kV, and ±15 kV air	±8 kV contact ±2 kV, ±4 kV, ±8 kV, and ±15 kV air	Floors should be wood, concrete, or ceramic tile. If floors are covered with synthetic material, the relative humidity should be at least 35%.
IEC 61000-4-4 Electromagnetic compatibility (EMC). Part 4-4: Testing and measurement techniques. Electrical fast transient/burst immunity test	±2 kV for power supply lines ±1 kV for input-output lines	±2 kV for supply mains ±1 kV for input/output lines	Mains power quality should be that of a typical home or hospital environment.
IEC 61000-4-5 Electromagnetic compatibility (EMC) - Part 4-5 Testing and measurement techniques. Surge immunity test	±1 kV line to ground ±2 kV line to ground	±1 kV line to line N/A - this Class II device does not connect to earth ground	Mains power quality should be that of a typical home or hospital environment.
IEC 61000-4-11 Electromagnetic compatibility (EMC). Part 4-11: Testing and measurement techniques. Voltage dips, short interruptions and voltage variations immunity tests	0% U_T 0.5 cycle at 45 degree increments 0% U_T 1 cycle 70% U_T 25 cycles (30 cycles if US) 0% U_T 5 sec	0% U_T 0.5 cycle at 45 degree increments 0% U_T 1 cycle 70% U_T 25 cycles (30 cycles if US) 0% U_T 5 sec	Mains power quality should be that of a typical home or hospital environment. If the user of the device requires continued operation during power mains interruptions, it is recommended that the device be powered from an uninterruptible power supply or a battery.

Immunity Test	IEC 60601 Test Level	Compliance Level	Electromagnetic Environment - Guidance
IEC 61000-4-8 Electromagnetic compatibility (EMC). Part 4-8: Testing and measurement techniques. Power frequency (50/60 Hz) magnetic field immunity test	30 A/m	30 A/m	Power frequency magnetic fields should be at levels characteristic of a typical location in a typical hospital or home environment.
NOTE: UT is the AC mains voltage prior to application of the test level.			

13.2.3 Guidance and Manufacturer's Declaration - Electromagnetic Immunity

This device is intended for use in the electromagnetic environment specified below. The user of this device should make sure it is used in such an environment.

Immunity Test	IEC 60601 Test Level	Compliance Level	Electromagnetic Environment - Guidance
Conducted RF IEC 61000-4-6 Electromagnetic compatibility (EMC). Part 4-6: Testing and measurement techniques. Immunity to conducted disturbances, induced by radio-frequency fields.	3 Vrms 150 kHz to 80 MHz	3 Vrms150 kHz to 80 MHz	Portable and mobile RF communications equipment should be used no closer to any part of the device, including cables, than the recommended 30 cm separation distance. Interference may occur in the vicinity of equipment marked with the following symbol:
	6 Vrms Amateur Radio & ISM Bands between 150 kHz and 80 MHz	Vrms Amateur Radio & ISM Bands between 150 kHz and 80 MHz	
Radiated RF IEC 61000-4-3 Electromagnetic compatibility (EMC) - Part 4-3: Testing and measurement techniques - Radiated, radio-frequency, electromagnetic field immunity test	10 V/m 80 MHz to 2.7 GHz Telecommunication frequencies as specified in clause 8.10 of IEC 60601-1-2:2014	10 V/m	
	450, 810, 870, 930, 1720, 1845, 1970, and 2450 MHz at 28 V/m	28 V/m	
	385 MHz at 27 V/m	27 V/m	
	710, 745, 780. 5240, 5500, and 5785 MHz at 9 V/m	9 V/m	

13.3 Wireless

Hereby, Respironics Inc. declares that this class 1 radio equipment is in compliance with Directive 2014/53/EU. the full text of the EU declaration of conformity is available at the following internet address: http://incenter.medical.philips.com/PMSPublic.

This product meets RF exposure requirements when it is positioned with a separation distance of at least 20 cm away from the body.

Notices: The Bluetooth® word mark and logos are registered trademarks owned by Bluetooth SIG, Inc. and any use of such marks by Philips Respironics is under license. Other trademarks and trade names are those of their respective owners.

The Trilogy Evo-series device transmits data between the therapy device and a mobile device, but it does not store any of your personally-identifiable health information. This connection between the therapy device and a mobile device is encrypted.

This device contains a certified Bluetooth/Wi-Fi radio:

- FCC ID (USA): 2AN9Z-1127941BT
- IC ID (Canada): 3234B-1127941BT

Near field communication (NFC) is certified under the following IDs:

- FCC ID (USA): 2AN9Z-1127941
- IC ID (Canada): 3234B-1127941

Use of non-original manufacturer-approved accessories may violate your local RF exposure guidelines and should be avoided.

This device complies with part 15 of the FCC Rules. Operation is subject to the following two conditions: (1) This device may not cause harmful interference, and (2) this device must accept any interference received, including interference that may cause undesired operation. This equipment has been tested and found to comply with the limits for a Class B digital device, pursuant to Part 15 of the FCC Rules. These limits are designed to provide reasonable protection against harmful interference in a residential installation. This equipment generates, uses, and can radiate radio frequency energy and, if not installed and used in accordance with the instructions, may cause harmful interference to radio communications. However, there is no guarantee that interference will not occur in a particular installation. If this equipment does cause harmful interference to radio, TV reception, or other devices which can be determined by turning the equipment on and off, the user is encouraged to try to correct the interference by one or more of the following measures:

- Reorient or relocate the receiving antenna (on the radio, TV, or other device).
- Increase the separation between the equipment and receiver.

- Connect the equipment into an outlet on a circuit different from that to which the receiver is connected.
- Consult the dealer of the device for help.

13.4 Software Licensing

This product contains software licensed under an open source license. For acknowledgements and license texts, a list can be viewed on the User Interface under Options > Information > Software Licenses. Philips Respironics hereby offers to deliver, upon request, a copy of the complete corresponding source code for the copyrighted open source software packages used in this product for which such delivery is requested by the respective licenses. This offer is valid for as long as the respective licenses require this offer to be valid. To obtain source code, please send your request in English with product type to open.source@philips.com. If you prefer not to use email or if you do not receive confirmation receipt within 2 weeks after mailing to this email address, please write in English to “Open Source Team, Philips Intellectual Property & Standards, High Tech Campus 5, 5656 AE Eindhoven, The Netherlands”. If you do not receive timely confirmation of your letter, please send an email to the email address above.

14. Glossary

14.1 Glossary of Terms

The following terms and acronyms appear throughout this manual.

Term	Definition
A/C-PC	Therapy mode: Assist control – assist-control and mandatory breaths with pressure control and optional AVAPS
A/C-VC	Therapy mode: Assist control – assist control and mandatory breaths with volume control
Active Circuit	Circuit that includes an active exhalation device
Apnea Interval	Interval in which the ventilator detects patient-triggered breaths.
Auto PEEP	Estimate of the any pressure (above PEEP) that exists in the patient airway at the end of exhalation It is updated at the end of exhalation of every mandatory or assisted (timed-cycled) breath. This value appears in the displayed parameters pane when the therapy mode is A/C-PC, A/C-VC, SIMV-PC, or SIMV-VC and the circuit type is passive, active flow, or dual limb.
Assist-Control Breath	Patient-initiated, time-cycled breath
AVAPS-AE Mode	Therapy mode: Provides variable pressure to achieve a target volume and to reduce airway resistance. Breaths are spontaneous, assist-control, mandatory or auto backup
Blower Hours	The total number of hours that the blower has been on over the life of the device. This value helps determine when the ventilator needs to be serviced. You cannot reset this value. It can only be reset by a service center.
BPM	Breaths per minute or beats per minute
BTPS	Body temperature and pressure saturated; A standardization for lung volumes and flows to barometric pressure at sea level, body temperature, and saturated with water vapor reflecting the condition of air in the lung.
CPAP	Therapy mode: Continuous positive airway pressure

Term	Definition
Dyn C	Estimate of the compliance of the pulmonary system (lung and chest wall) in milliliters per cmH_2O, computed on a breath-to-breath basis without requiring a static maneuver. It is updated at the end of exhalation of every mandatory or assisted breath (time cycled), and is displayed as the average over the last three mandatory or assisted breaths. It is corrected to body temperature and pressure saturated (BTPS) conditions. This value appears in the displayed parameters pane when the therapy mode is A/C-PC, A/C-VC, SIMV-PC, or SIMV-VC and the circuit type is passive, active flow, or dual limb.
Dyn R	Estimate of the airway resistance in cmH_20/(L/s), computed on a breath-to-breath basis without requiring a static maneuver. It is updated at the end of exhalation of every mandatory or assisted (timed cycled) breath, and is displayed as the average over the last three mandatory or assisted breaths. It is corrected to body temperature and pressure saturated (BTPS) conditions. This value appears in the displayed parameters pane when the therapy mode is A/C-PC, A/C-VC, SIMV-PC, or SIMV-VC and the circuit type is passive, active flow, or dual limb.
Dyn Pplat	Estimate of the maximum alveolar pressure during inspiration in cmH_20, computed on a breath-to-breath basis without requiring a static maneuver. It is compensated for Auto-PEEP. It is updated at the end of exhalation of every mandatory or assisted (timed cycled) breath. This value appears in the displayed parameters pane when the therapy mode is A/C-PC, A/C-VC, SIMV-PC, or SIMV-VC and the circuit type is passive, active flow, or dual limb.
EPAP	Expiratory positive airway pressure
ESD	Electrostatic discharge
$EtCO_2$	End tidal carbon dioxide. The amount of carbon dioxide at the end of exhalation. No value appears in the displayed parameters pane when the CO_2 sensor does not detect a breath. Upon initially connecting a sensor, allow up to 2 minutes for data to appear.

Term	Definition
Exhaled tidal volume Vte	The exhaled tidal volume in milliliters, derived from summing the expiratory patient flow. The Vte is updated once per breath. It is corrected to body temperature and pressure saturated (BTPS) conditions. This value appears in the displayed parameters pane when the circuit type is passive, active flow, or dual limb.
FiO_2	Fraction of inspired oxygen (the percentage of oxygen in the air inhaled) It is updated approximately every 300msec. The FiO_2 measurement does not automatically compensate for changes in altitude.
I:E Ratio	The ratio of inspiratory time to expiratory time on the previous breath expressed as 1:X or X:1 for inverse ratios. This value does not appear in the displayed parameters pane when using mouthpiece ventilation.
Infant	Full term newborn up to one month in age with mass that is greater than or equal to 2.5 kg.
Inhaled tidal volume Vti	The tidal volume, in milliliters, delivered to the patient. This value is derived from summing the inspiratory patient flow. The Vti is updated once per breath. It is corrected to body temperature and pressure saturated (BTPS) conditions. This value appears in the displayed parameters pane when the circuit type is active PAP or when using mouthpiece ventilation.
Inspiratory time	Length of the inspiratory phase
IPAP	Inspiratory positive airway pressure
L/min	Liters per minute
LED	Light emitting diode
Mandatory Breath	A ventilator-initiated, time-cycled breath
Manometer	Pressure indicator
Mean Airway Pressure (MAP)	The average applied pressure during the breath in cmH_2O, displayed as an average over the previous six breaths. It is updated at the end of each exhalation. This value does not appear in the displayed parameters pane when using mouthpiece ventilation.

Term	Definition
Minute Ventilation (MinVent)	The volume of patient exhaled gas in one minute, based on a six-breath average of exhaled tidal volume (Vte) and respiratory rate (BPM). It is corrected to body temperature and pressure saturated (BTPS) conditions. Minute ventilation is updated at the start of each breath, or after 15 seconds if no breath is detected. For Active PAP circuits, the displayed Minute Ventilation is calculated using the inhaled tidal volume (Vti). This value does not appear in the displayed parameters pane when using mouthpiece ventilation.
MPV	Mouthpiece ventilation
Passive Circuit	A circuit that includes a passive exhalation device.
Peak Inspiratory Flow (PIF)	The maximum inspiratory flow delivered to the patient in L/min. It is corrected to body temperature and pressure saturated (BTPS) conditions and updated once per breath.
Peak Inspiratory Pressure (PIP)	The maximum inspiratory pressure delivered to the patient in cmH_2O, updated once per breath.
PEEP	Positive end expiratory pressure.
Percentage Spontaneous Triggered Breaths (%Spont Trig)	The percentage of breaths that are patient-initiated over the most recent 50 breaths. It is updated once per breath.
Pressure Control (PC)	Pressure applied during inspiration above PEEP for time-cycled breaths
Pressure Support (PS)	Pressure applied during inspiration above PEEP for patient-cycled breaths
PSV	Therapy mode: Pressure support ventilation with optional AVAPS
Pulse Rate (PR)	Number of heartbeats per minute (BPM) measured by pulse oximetry
Ramp	Flow pattern in volume control modes where the airflow starts high and decreases throughout inspiration of the breath. See Square.
Respiratory Rate (RR)	The measured breathing rate of the patient/ventilator in breaths per minute (BPM), based on a six-breath average that includes both patient-triggered and ventilator-triggered breaths. It is updated at the start of every breath, after 15sec, or when the low respiratory rate alarm is annunciated, whichever interval is shorter.
Rise Time	Time required for the ventilator to change from the expiratory pressure setting to the inspiratory pressure setting when the breath is triggered.
S/T	Therapy mode: Spontaneous/timed ventilation with patient-triggered and patient-cycled or ventilator-triggered and ventilator-cycled breaths with optional AVAPS.
Sigh	Delivers a periodic, larger volume breath. Settings adjust the frequency and volume. Available only in A/C-VC mode.

Term	Definition
SIMV-PC	Therapy mode: Synchronized intermittent mandatory ventilation (pressure control) – spontaneous breaths with pressure support, assist—control breaths and mandatory breaths with pressure control
SIMV-VC	Therapy mode: Synchronized intermittent mandatory ventilation (volume control) – spontaneous breaths with pressure support, assist—control breaths and mandatory breaths with volume control
SpO_2	Blood oxygen saturation measured by pulse oximetry
Spontaneous Breath	Patient-initiated, patient-cycled breath
Square	Flow pattern in volume control modes where the airflow is generally constant throughout inspiration of the breath. See Ramp.
Tidal Volume	The volume of air passing in and out of the lungs during a breath.
Vte	Exhaled tidal volume
Vti	Inhaled tidal volume

Warranty

WARRANTY

Respironics, Inc. (Philips Respironics) warrants that defects in the Product due to faulty materials and workmanship will be repaired or replaced at Respironics' expense if convincing proof of purchase within the Warranty Period (as defined herein) is provided. Philips Respironics warrants that the Product will be free from defects in material and workmanship under normal and proper use in accordance with applicable instructions for a period of two years ("Warranty Period") from the date of shipment by Philips Respironics to the original purchaser. Accessories and replacement parts are not covered under this warranty. However, Philips Respironics warrants that the internal battery in the Product will be free from defects in material and workmanship, under normal and proper use and when correctly maintained, for a period of ninety days from the date of shipment by Philips Respironics to the original purchaser.

Contact our Consumer Care Center at 1-800-682-7664 (North America), outside North America contact your local Respironics, Inc. Consumer Care Center. Internet information: www.philips.com/healthcare (North America) or www.philips.com (outside North America).

LIMITATIONS

If any Product purchased from Philips Respironics fails to conform to the warranties set forth herein during the Warranty Period as determined by Philips Respironics, in its sole discretion, Philips Respironics may discharge its warranty obligation by choosing to repair or replace the Product. This may be accomplished by installing new or remanufactured assemblies or components, or by other repairs deemed appropriate in the sole discretion of Philips Respironics. The choice of repair or replacement by Philips Respironics will be the sole and exclusive remedy of the original purchaser. Philips Respironics reserves the right, in its sole discretion, to refund the purchase price in lieu of repair or replacement of the Product. In no event will Philips Respironics' maximum liability under these warranties exceed the price paid to Philips Respironics by the original purchaser for the Product.

CONDITIONS

This warranty does not cover damage or injury whether to the Product or to personal property or persons caused by accident, misuse, abuse, negligence, failure to install in accordance with Philips Respironics' installation instructions, failure to operate under conditions of normal use and in accordance with the terms of the operating manual and instructions, failure to maintain in accordance with the applicable service manuals, or alteration or any defects not related to materials or workmanship of the Product. This warranty does not cover damage which may occur in shipment and does not apply to the device if dropped, misused, altered or otherwise damaged after shipment. This warranty does not apply to any Product or individual part of a Product that may have been repaired or altered by anyone other than Philips Respironics or an authorized Philips Respironics service center. This warranty does not apply to any Product which is not purchased new.

DISCLAIMERS

EXCEPT AS SET FORTH IN THIS LIMITED WARRANTY, PHILIPS RESPIRONICS MAKES NO WARRANTIES, EXPRESSED OR IMPLIED, STATUTORY OR OTHERWISE, REGARDING THE PRODUCT, ITS QUALITY OR PERFORMANCE. PHILIPS RESPIRONICS SPECIFICALLY DISCLAIMS THE IMPLIED WARRANTY OF MERCHANTABILITY AND THE IMPLIED WARRANTY OF FITNESS FOR A PARTICULAR PURPOSE. IN NO EVENT WILL PHILIPS RESPIRONICS BE LIABLE FOR THE COST OF PROCUREMENT OF SUBSTITUTE PRODUCTS OR FOR ANY INDIRECT, SPECIAL, CONSEQUENTIAL, PUNITIVE, EXEMPLARY OR INCIDENTAL DAMAGES (INCLUDING, BUT NOT LIMITED TO, COMMERCIAL LOSS OR LOST REVENUES), FOR ANY CAUSE OF ACTION, WHETHER IN CONTRACT OR TORT, AND WHETHER OR NOT PHILIPS RESPIRONICS WAS AWARE OR SHOULD HAVE BEEN AWARE OF THE POSSIBILITY OF THESE DAMAGES. EXCEPT FOR THE OBLIGATIONS UNDER THIS LIMITED WARRANTY, PHILIPS RESPIRONICS WILL NOT HAVE ANY OBLIGATION OR LIABILITY FOR ANY OTHER LOSS, DAMAGE OR INJURY RESULTING DIRECTLY OR INDIRECTLY FROM THE PRODUCT. PURCHASER'S SOLE AND EXCLUSIVE REMEDY FOR BREACH OF THE WARRANTIES SET FORTH IN THIS DOCUMENT WILL BE AS PROVIDED IN THE PARAGRAPH DESCRIBING LIMITATIONS.

Purchaser is cautioned that no person or entity is authorized to make any warranties on behalf of Philips Respironics and any such alleged warranties are hereby disclaimed by Philips Respironics.

REF 1134485

Respironics Inc.
1001 Murry Ridge Lane
Murrysville, PA 15668 USA

1134485 R04
ZL 07/22/2019
EN-DOM